TABLE OF CONTENTS

FOREWORD
Presentation Information 2

DOORHAN ROLLING SHUTTER SYSTEMS 5
DoorHan Rolling Shutter Systems 7
- Rolling Shutter Drawings and Mounting Site Preparation Diagrams 27
- Certificates 35

DOORHAN DOCKING SYSTEMS 47
General Information about DoorHan Dock Levellers 50
- Series DLHH Electrohydraulic Dock Levellers with Hinged Lip 50
  Drawings of Electrohydraulic Dock Levellers with Hinged Lip and Mounting Site Preparation Diagrams 53
- Series DS Electrohydraulic Dock Levellers with Telescopic Lip 63
  Drawings of Electrohydraulic Dock Levellers with Telescopic Lip and Mounting Site Preparation Diagrams 67
- Series MODL Mechanical Dock Levellers 79
  Drawings of Mechanical Dock Levellers and Mounting Site Preparation Diagrams 81

DoorHan Mechanical Folding Tracks 92
- Drawing of mechanical folding tracks and mounting site preparation diagram 95

Mobile tracks DoorHan 100
DoorHan Mobile Ramps 104
DoorHan Lifting Tables 108
General Information about DoorHan Dock Shelters 114
- Series D.SH-RT Dock Shelters with Retractable Structure 114
  Drawings of Dock Shelters with Retractable Structure and Mounting Site Preparation Diagrams 117
- Series D.SH-RD Dock Shelters with Non-collapsible 121
  Drawings of Dock Shelters with Non-collapsible and Mounting Site Preparation Diagrams 125
- Series DSHINF Inflatable Dock Shelters 129
  Drawings of Inflatable Dock Shelters and Mounting Site Preparation Diagrams 133

DoorHan External frames 138
- Drawings of External Frames and Mounting Site Preparation Diagrams 141

General Information about DoorHan Dock Houses 162
- Standard series Dock Houses DHOUS HI/SI (45/60/90) 162
  Drawings of Standard series Dock Houses and Mounting Site Preparation Diagrams 165
- Light Series Dock Houses DHOUS LI (45/60/90) 179
  Drawings of Light Series Dock Houses and Mounting Site Preparation Diagrams 181

General Information about DoorHan Flexible PVC Doors 194
- DoorHan Strip PVC Doors 195
  Drawings of Strip PVC Doors and Mounting Site Preparation Diagrams 197
- DoorHan Swing PVC doors 201
  Drawings of Swing PVC Doors and Mounting Site Preparation Diagrams 203
- DoorHan Roll-up Speed Doors 207
  Drawings of Roll-up Speed Doors and Mounting Site Preparation Diagrams 209

Optional Equipment 213
- Drawings of Optional Equipment and Mounting Site Preparation Diagrams 215

Typical Errors in Design of Docking systems 221
Certificates 225

AFTERWORD 237

The company DoorHan reserves the right to modify design of the products without preliminary notice.

FOREWORD

Presentation Information

This hand-book describes the main production activity lines of the company DoorHan. It is intended for the companies, which are engaged in designing buildings and structures for residential and industrial purposes as well as the surrounding areas. It can also be useful for building companies, which perform installation of moving enclosing structures and loading equipment.

This hand-book contains presentation and engineering information, which helps:

- to become acquainted with all range of modern technical solutions, which are offered by the company DoorHan for buildings and the adjacent areas;
- to make optimal choice of products DoorHan within frames of a project specifications;
- to design the building so, that after structural works have been completed, the object is ready for quick and unhindered installation of DoorHan products;
- to avoid design errors, which can cause increase of Design and mounting costs as well as unreasonable commission time extension.

The company DoorHan, located in Odintsovo district, Moscow region, is a manufacturing holding group of companies, which has been working at the market of moving enclosing structures since 1994. In this period the company DoorHan has established itself as a leader at the markets of Russia and CIS countries.

Due to its unique system of keeping products quality at a constantly high level and application of innovative methods of production, the company DoorHan compares favorably with other manufacturing companies.

Export of products DoorHan to CIS countries, Europe and Asia encourages increase of national production competitiveness and build-up of material and technical resources of domestic industry.

The company DoorHan pays much attention to innovative developments. Every year the holding assigns considerable money funds for purchasing new equipment and modernization of the existing equipment. Investment in advance factory faculties and research and development activities allows to use advance technologies at production.

Many process solutions of the company DoorHan do not have world analogues and are confirmed by author's certificates. Besides, the company develops new standards for mobile enclosing structures in accordance with public requirements and modern technologies.

One of the main directions of the company's development activity is rise of mobile enclosing structures energy efficiency. For that the company cooperates with the Research Institute of Building Physics of Russian Academy of Architecture and Building Science. Within this project a consulting research-and –technology centre has been established on the territory of the company DoorHan.

The company DoorHan can be considered as a unique one not only for the above said reasons. The parent company DoorHan is the only producer of the whole range of hardware for all types of gates, rolling shutters and loading equipment in Europe.

DoorHan products meet the requirements of the international standards and are certified in Russia and abroad. One of the main principles of the company lies in working only with those suppliers, who gave a good account of themselves. That is another reason of high quality products manufactured by the company DoorHan.

An extensive network of manufacturing and storage facilities and competent logistics allow to minimize hardware delivery terms. For the time being the company DoorHan comprises 3 plants, 21 industrial warehouses, 10 sale offices. Such structure enables to provide products and repair parts to any site in the territory of Russia and CIS countries within a time period from 1 day. Currently more than 8000 companies, located in the sales territory of the company, render installation and after-sale services covering DoorHan products.

The company DoorHan production activity comprises the following segments:

- "DoorHan – gate systems";
- "DoorHan – rolling shutter systems";
- "DoorHan – loading system";
- "DoorHan – door systems";
- "DoorHan – aluminium systems";
- "DoorHan – automation systems";
- "DoorHan – quick-erecting modular systems".

DOORHAH ROLLING SHUTTER SYSTEMS

ROLLING SHUTTER SYSTEMS

DOCKING SYSTEMS

DOORHAN ROLLING SHUTTER SYSTEMS

The company DoorHan manufactures 3 types of rolling shutter products: rolling shutters, rolling shutter doors and steel rolling doors. The rolling shutters and rolling shutter doors are used in residential and industrial applications. They protect from bad weather, provide thermal and sound insulation.

DoorHan steel rolling doors are designed for intensive operation and are installed in industrial buildings as well as close the entry to the fenced area.

All components and hardware for DoorHan rolling shutter systems are produced using advanced technologies at up-to-date automated production lines, equipped with machinery of the reputed equipment makers. In order to make our products resistant to corrosion and aggressive environments and to increase their operation life and durability, we use galvanized metal parts (minimal zinc coating thickness is 18 micron). Reliability, operational safety and conformance of DoorHan rolling shutters to Russian standards are confirmed by certificates (see Page 35).

DESIGN OF ROLLING SHUTTERS AND ROLLING SHUTTER DOORS

A rolling shutter (rolling shutter door) is a flexible leaf, which consists of aluminium profiles and winds on a shaft, positioned over the aperture. The shaft is protected by the protective housing. The leaf moves along guides, which are fastened on the edges of the aperture. Dismantling of rolling shutters is impossible, if the leaf is down. The rolling shutters and the rolling shutter doors can be equipped both with automated and manual operators

DESIGN OF STEEL ROLLING DOORS

The leaf of the steel rolling door consists of steel profiles and is fixed on a shaft, mounted over the aperture on two cantilevers. The leaf is set in motion by an electric shaft operator. When the door is opening, the leaf moves up and winds on the shaft. When the door is closing, the leaf unwinds and moves down. Manual operation of the steel rolling door is also possible.

MOUNTING TYPES

Lay-on mounting, housing outside (for installation of rolling shutters and rolling doors)

Lay-on mounting, housing inside (for installation of rolling shutters)

Embedded mounting, housing outside (for installation of rolling shutters)

Embedded mounting, housing inside (for installation of rolling shutters and rolling doors)

PROTECTIVE HOUSINGS FOR ROLLING SHUTTERS AND ROLLING DOORS

Rectangular **Round** **Half-round**

PROFILES TYPES FOR ROLLING SHUTTERS AND ROLLING DOORS

ПЕНОЗАПОЛНЕННЫЕ ПРОФИЛИ РОЛИКОВОЙ ПРОКАТКИ

The foam-filled aluminium profiles are produced with hard or soft foam filler – foam polyurethane, depending on the required Design rigidity. As a rule they are used in rolling shutters, which are intended for mounting in small apertures. The foam-filled profiles are also available with perforation.

Range of Colours

Signal white (RAL9003), sepia brown (RAL8014), agate grey (RAL7038), light ivory (RAL1015), wine red (RAL3005), moss green (RAL6005), signal blue (RAL5005) and white aluminium (RAL9006). The profiles can be painted in any colour according to the international RAL colour card upon customer's request.

Recommended Dimensions

For rolling shutters:
width – from 500 to 3000 mm,
height – from 500 to 3000 mm.
For rolling doors:
width – from 2000 to 6000 mm
height – from 1000 to 5000 mm

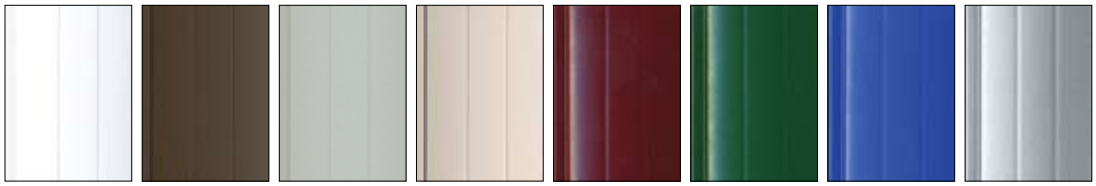

RAL 9003 signal white **RAL 8014 sepia brown** **RAL 7038 agate grey** **RAL 1015 light ivory** **RAL 3005 wine red** **RAL 6005 moss green** **RAL 5005 signal blue** **RAL 9006 white aluminium**

EXTRUDED PROFILES

The aluminium extruded profiles provide additional protection against burglary, as they have larger wall thickness, than the foam-filled profiles, and are more resistant to mechanical damages. Extruded profiles with windows are also available.

Range of Colours

Signal white (RAL9003), sepia brown (RAL8014), agate grey (RAL7038), light ivory (RAL1015), wine red (RAL3005), moss green (RAL6005), signal blue (RAL5005) and white aluminium (RAL9006). The profiles can be painted in any colour according to the international RAL colour card upon customer's request.
Options:
- 2 colours imitating wood texture – WALNUT and GOLDEN OAK;
- rolling shutter leaf, housing and guides can be painted in the same colour.

Recommended Dimensions

For rolling shutters:
width – from 500 to 5000 mm,
height – from 500 to 5000 mm.
For rolling doors:
width – from 2000 to 6000 mm
height – from 1000 to 5000 mm

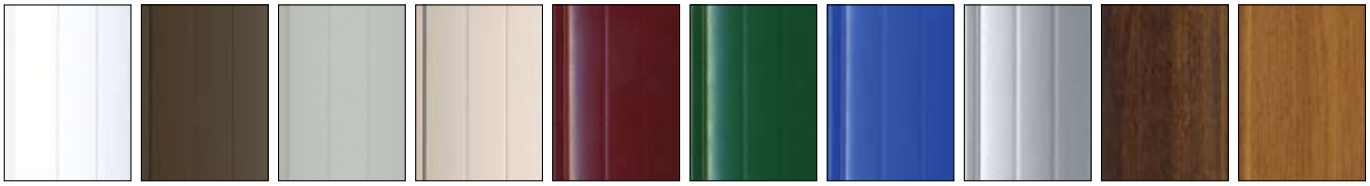

RAL 9003 signal white | **RAL 8014 sepia brown** | **RAL 7038 agate grey** | **RAL 1015 light ivory** | **RAL 3005 wine red** | **RAL 6005 moss green** | **RAL 5005 signal blue** | **RAL 9006 white aluminium** | **Walnut** | **Golden oak**

STEEL PROFILES

The steel profiles are used for rolling shutters, which are mounted in small-size window apertures.

Range of Colours

The profiles are galvanized, can be painted in any colour according to the international RAL colour card upon customer's request.

Recommended Dimensions

width – from 500 to 1500 mm,
height – from 500 to 2000 mm.

TYPES OF PROFILES FOR STEEL ROLLUNG DOORS

STEEL PROFILES

Profiles for steel rolling doors are made of steel by roll drawing method. They protect the building against unauthorized opening. The profiles are available with perforation and with windows (you will be able to watch the space in front of the door). Due to super alloys used by production of the profiles with perforation and windows, they match the solid profiles in strength.

Range of Colours

The profiles are galvanized, can be painted in any colour according to the international RAL colour card upon customer's request.

Recommended Dimensions

width – from 2000 to 8000 mm,
height – from 2000 to 6000 mm.

CONTROL MECHANISMS FOR ROLLING SHUTTERS AND ROLLING DOORS

ROLLING SHUTTERS /ROLLING SHUTTER DOORS WITH HAND STRAP, BRAID AND METAL ROPE OPERATORS

Strap Operator

The easy-to-use strap operator is mounted on rolling shutters/doors with leaf weight up to 15 kg. The leaf moves up and down due to tensioning of the strap.

Braid Winch

It is mounted on the rolling shutters/rolling shutter doors with leaf weight up to 20 kg. It is operated by turning the handle of the braid box.

Metal Rope Winch

It lifts the rolling shutters/ rolling shutter doors with leaf weight up to 80 kg due to use of steel cable. Operation principle is similar to the braid winch operation principle.

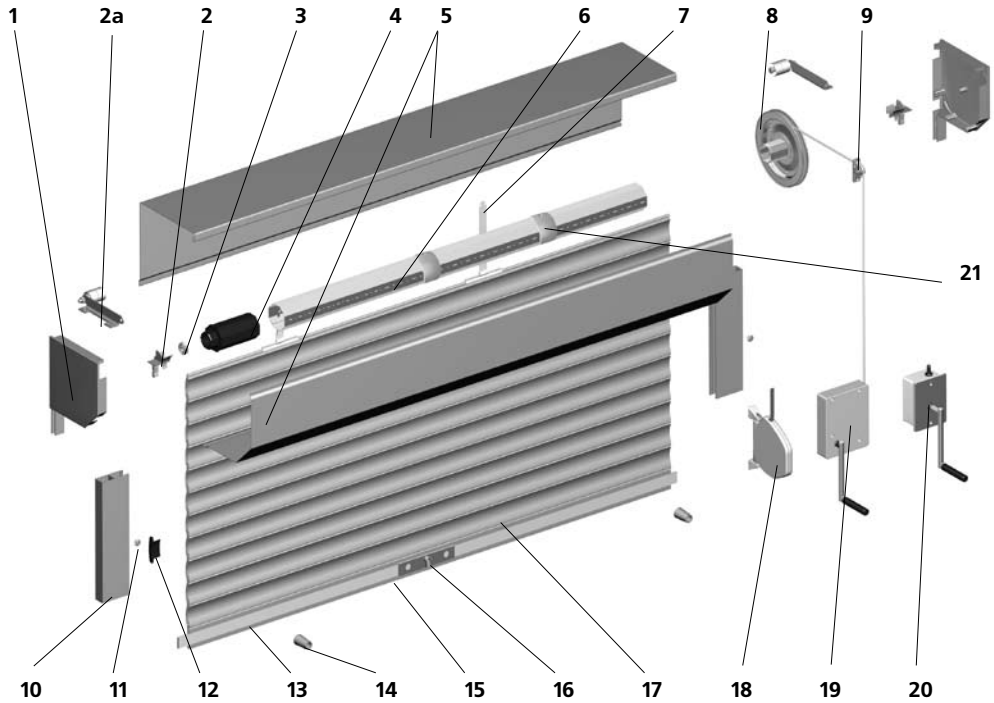

1. Side frame (cap) RK137, RK150, RK165, RK180, RK205, RK250, RK250S, RK300, RK375, RK165D, RK165R, RK180D, RK180R, RK205D, RK205R
2. Guide device RU40, RU55
2a. Guide roller RU77 (RV77)
3. Bearing BR28, BR42
4. Universal cap (adjustable) KP40, KP60 (KPU60, KPU70, KPU70S)
5. Protection housing RB137, RB150, RB165, RB180, RB205, RB250, RB300, RB375, RBE165D, RBE165R, RBE180D, RBE180R, RBE205D, RBE205R
6. Octagonal shaft RV40, RV60, RV70
7. Traction spring RS130, RS170, RS190
8. Pulley H140, H155, H170, S190, S210, S21070
9. Guide for braid (strap) RT (RL)
10. Guide profile RG53, RG65, RG70, RG90, RG53B, RG65B, RG70B, RG60BS
11. Plug PB14
12. Side lock SL42, SL45, SL55, SL77, SLE45, SLE55, ST40, ST45, ST55, ST77, SLE45S
13. Locking strap RH12K, RH20K
14. Stopper RS
15. End profile RA45E, RA50E, RA77E, RA77K
16. Crossbar lock KL, KL77
17. Profile (leaf) RH42, RH45, RH42P, RH45P, RH58, RH58P, RH77, RHE45, RHE55, RHE56G, RHE56, RHT42, RHT45, RHT58, RHT77
18. Strap (braid) inertia winch RHL (RHS)
19. Braid reducer operator RHR
20. Metal rope winch RHF40, RHF80
21. Spacer ring KD40, KD60, KD70

ROLLING SHUTTERS WITH РУЧНОЙ HAND CRANK OPERATOR

Hand Crank Operator

It allows to lift rolling shutters/rolling shutter doors with leaf weight up to 30 kg. By clockwise turning the hand crank the leaf moves up, by counter-clockwise turning the hand crank the leaf moves down.

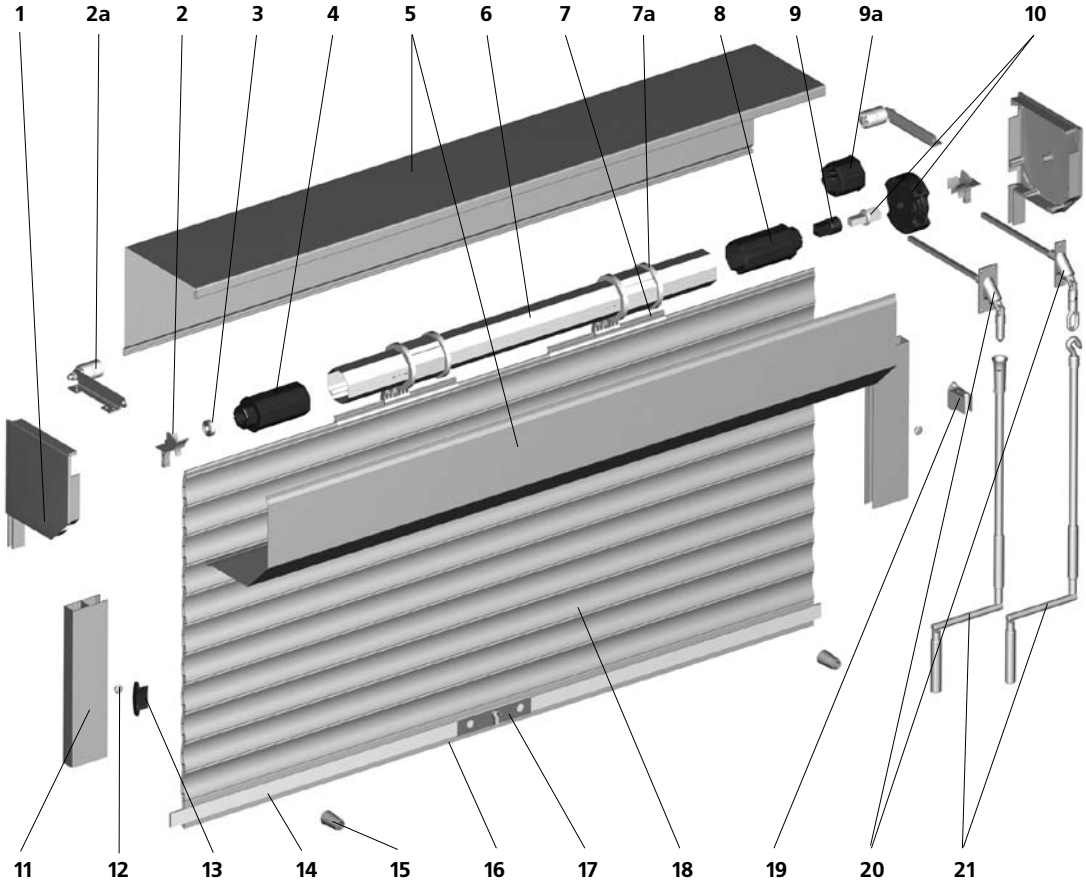

1. Side frame (cap) RK137, RK150, RK165, RK180, RK205, RK250, RK250S, RK300, RK375, RK165D, RK165R, RK180D, RK180R, RK205D, RK205R, RHS22
2. Guide device RU40, RU55, RHS22
2a. Guide roller RU77 (RV77)
3. Bearing BR28, BR42, RHS22
4. Universal cap (adjustable) KP40, KP60 (KPU60, KPU70, KPU70S)
5. Protection housing RB137, RB150, RB165, RB180, RB205, RB250, RB300, RB375, RBE165D, RBE165R, RBE180D, RBE180R, RBE205D, RBE205R, RHS22
6. Octagonal shaft RV40, RV60, RV70
7. Automatic lock RB2, RB3, RB4, RM2, RM3, RHS22
7a. Nogging ring RD40, RD60, RD70
8. Universal cap KP40, KP60
9. Insert RHU
9a. Cap RHU60 (RHU70)
10. Reducer with adapter RW33
11. Guide profile RG53, RG65, RG70, RG90, RG53B, RG65B, RG70B, RG60BS
12. Plug PB14, RHS22
13. Side lock SL42, SL45, SL55, SL77, SLE45, SLE55, ST40, ST45, ST55, ST77, SLE45S
14. Locking strap RH12K, RH20K
15. Stopper RS, RHS22
16. End profile RA45E, RA50E, RA77E, RA77K
17. Crossbar lock KL, KL77, RHS22
18. Profile (leaf) RH42, RH45, RH42P, RH45P RH58, RH58P, RH77, RHE45, RHE55, RHE56G, RHE56, RHT42, RHT45, RHT58, RHT77
19. Clip SC
20. Cardan RK4S, RK4B, RK4L
21. Hand crank VRK, VRP, VRS

ROLLING SHUTTERS/DOORS WITH SPRING-INERTIA MECHANISM

Spring-Inertia Mechanism

The spring-inertia mechanism is used in rolling shutters/rolling shutter doors with leaf weight up to 60 kg. You can easily lift a rolling shutter/door by hand. A rolling shutter/rolling shutter doors moves down under its own weight, because weight of its leaf is balanced with a torsion spring, which is installed in the roller shutter shaft.

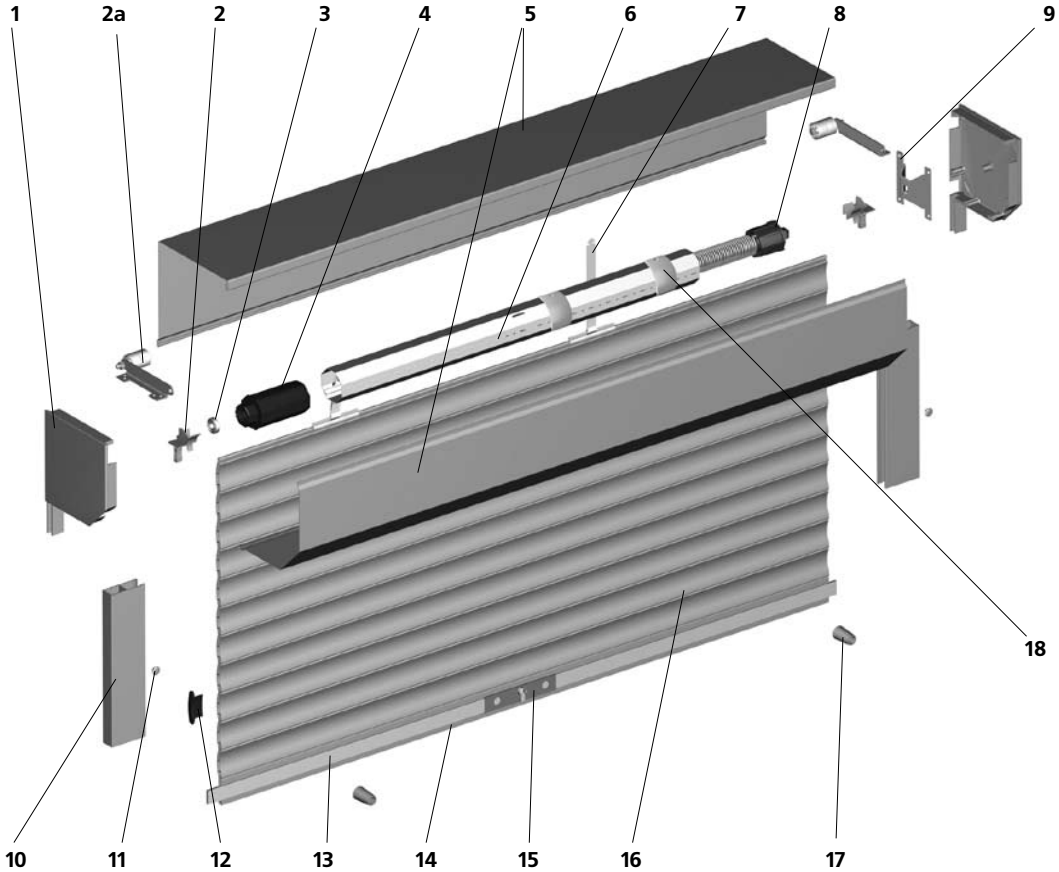

1. Side frame RK137, RK150, RK165, RK180, RK205, RK250, RK250S, RK300, RK375, RK165D, RK165R, RK180D, RK180R, RK205D, RK205R, RHS22
2. Guide device RU40, RU55, RHS22
2a. Guide roller RU77 (RV77)
3. Bearing BR28, BR42, RHS22
4. Universal cap (adjustable) KP40, KP60 (KPU60, KPU70, KPU70S)
5. Protection housing RB137, RB150, RB165, RB180, RB205, RB250, RB300, RB375, RBE165D, RBE165R, RBE180D, RBE180R, RBE205D, RBE205R, RHS22
6. Octagonal shaft RV40, RV60, RV70
7. Traction spring RS130, RS170, RS190, RHS22
8. Spring-inertia mechanism 4ROL04/10, 4ROL06/13, 4ROL10/12, 4ROL15/21, 4ROL15/16, 4ROL20/16, 6ROL12/21, 6ROL18/12, 6ROL18/17, 6ROL28/14, 6ROL38/12, 6ROL62/11, 7ROL46/13, 7ROL50/11, 7ROL72/10
9. Fastening plate BP100
10. Guide profile RG53, RG65, RG70, RG90, RG53B, RG65B, RG70B, RG60BS
11. Plug PB14
12. Side lock SL42, SL45, SL55, SL77, SLE45, SLE55, ST40, ST45, ST55, ST77, SLE45S, RHS22
13. Locking plate RH12K, RH20K
14. End profile RA45E, RA50E, RA77E, RA77K
15. Crossbar lock KL, KL77, RHS22
16. Profile (leaf) RH42, RH45, RH42P, RH45P RH58, RH58P, RH77, RHE45, RHE55, RHE56G, RHE56, RHT42, RHT45, RHT58, RHT77
17. Stopper RS, RHS22
18. Spacer ring KD40, KD60, KD70

ROLLING SHUTTERS / ROLLING SHUTTER DOORS WITH AUTOMATIC OPERATION

Rolling shutters / rolling shutter doors equipped with electric operators are most easy-to-use. In case of power outage, you can use emergency lift system and operate rolling shutters by hand. Rolling shutters with electric operators can also be optionally equipped with remote control units, group control units and various switches.

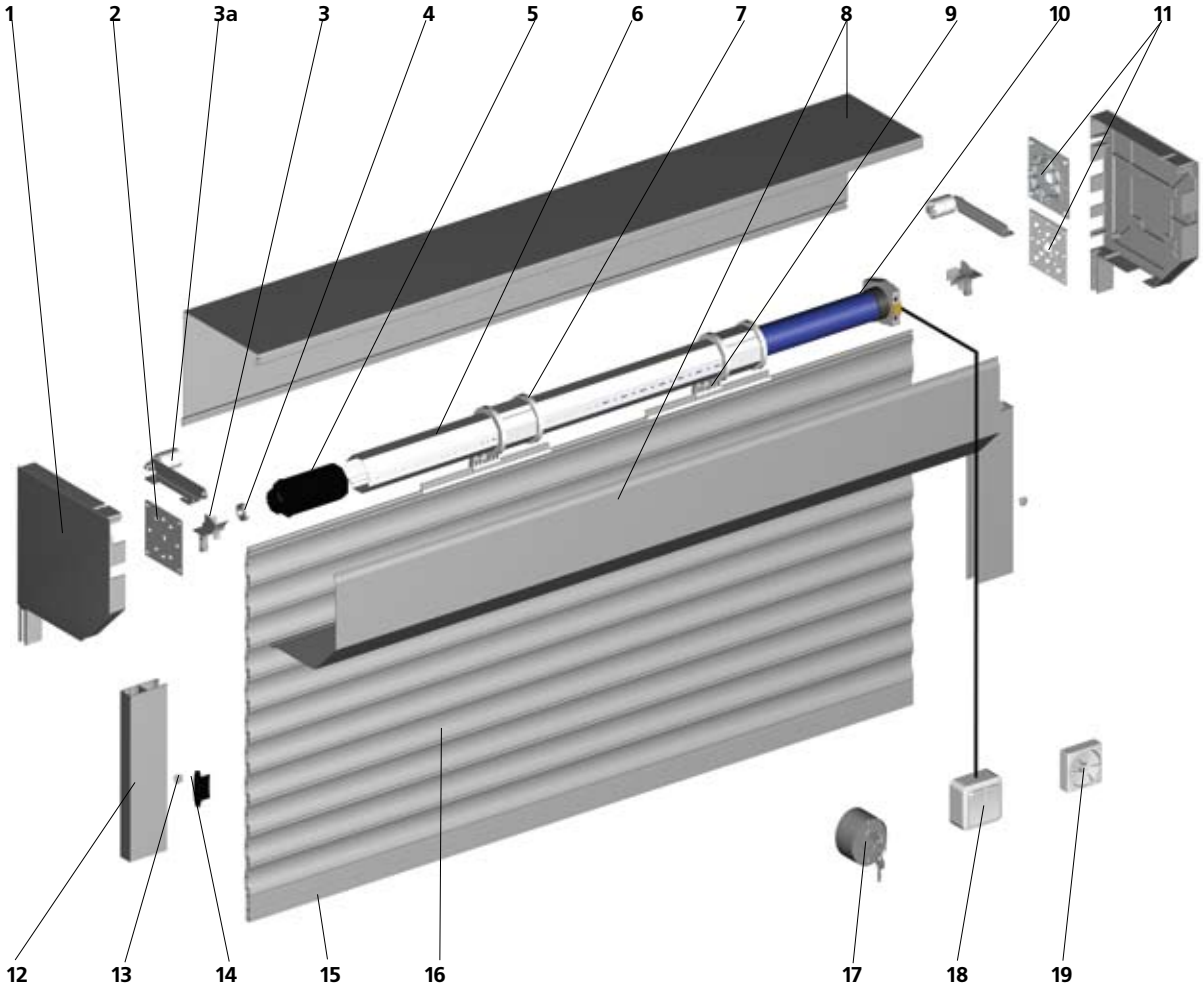

1. Side frame RK137, RK150, RK165, RK180, RK205, RK250, RK250S, RK300, RK375, RK165D, RK165R, RK180D, RK180R, RK205D, RK205R
2. Bearing support BS100, BS42
3. Guide device RU40, RU55
3a. Guide roller RU77 (RV77)
4. Bearing BR28, BR42
5. Universal cap (adjustable) KP40, KP60 (KPU60, KPU70, KPU70S) (регулируемая)
6. Octagonal shaft RV40, RV60, RV70
7. Nogging ring RD40, RD60, RD70
8. Protection housing RB137, RB150, RB165, RB180, RB205, RB250, RB300, RB375, RBE165D, RBE165R, RBE180D, RBE180R, RBE205D, RBE205R
9. Automatic lock RB2, RB3, RB4, RM2, RM3
10. Tubular shaft Gaposa, Somfy, RollHan
11. Universal fastening BU100K, KMF50, KMF60
12. Guide profile RG53, RG65, RG70, RG90, RG53B, RG65B, RG70B, RG60BS
13. Plug PB14
14. Side lock SL42, SL45, SL55, SL77, SLE45, SLE55, ST40, ST45, ST55, ST77, SLE45S
15. End profile RA45E, RA50E, RA77E, RA77K
16. Profile (leaf) RH42, RH45, RH42P, RH45P, RH58, RH58P, RH77, RHE45, RHE55, RHE56G, RHE56, RHT42, RHT45, RHT58, RHT77
17. Switch with key ACPG
18. Button switch ACPE, ACPES
19. Turn switch ACSE

Fastening KMF50(60) is used with electric operators Somfy without emergency opening, fastening BU100K is used with electric operators RollHan and electric operators Somfy and Gaposa with emergency opening.

CONTROL MECHANISM FOR STEEL ROLLING DOORS

STEEL ROLLING DOORS WITH AUTOMATIC CONTROL

Steel rolling doors equipped with electric operators are most easy-to-use. In case of power outage, you can use emergency lift system and operate rolling doors by hand. Rolling doors with electric operators can also be optionally equipped with remote control units, group control units and various switches.

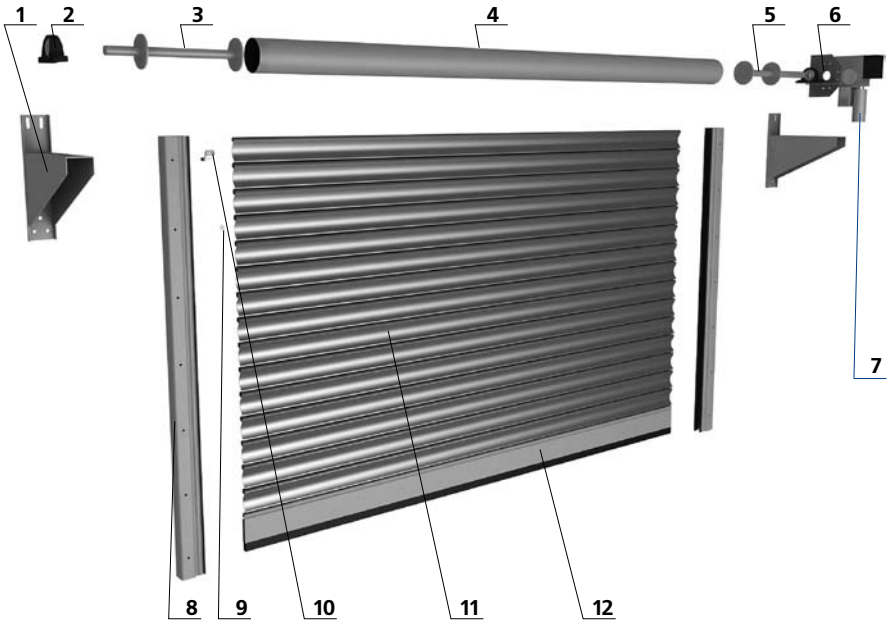

1. Cantilever SR425
2. Bearing support BS30 (BS40)
3. Adjustable cap KPU10230 (KPU159)
4. Octagonal shaft (shaft D=159) RV102 (shaft D=159)
5. Adjustable cap with key KPU10230S (KPU159S)
6. Bracket for electric operator fastening SR200
7. Electric shaft operator RV20.12-30(RV40.15-40, RV55.15-40)
8. Guide profile RG95S
9. Plug PB14
10. Side lock SLE117
11. Profile (leaf) RHS117, RHS117P, RHS117G
12. End profile RA120E

STEEL ROLLING DOORS WITH SPRING–INERTIA MECHNISM

A drum spring-inertia mechanism is used for steel rolling doors with leaf weight up to 200 kg. Due to this mechanism you can easy lift a rolling door by hand. The rolling door moves down under its own weight.

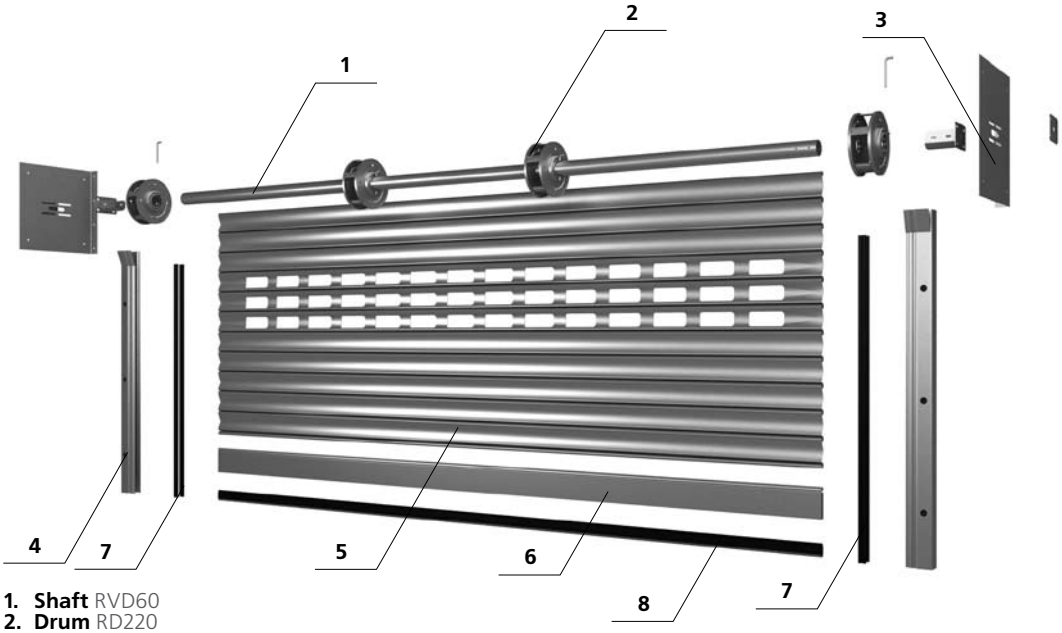

1. **Shaft** RVD60
2. **Drum** RD220
3. **Cantilever bracket** SR350
4. **Guide profile** RG95S
5. **Profile (leaf)** RHS117, RHS117P, RHS117G
6. **End profile** RA120E
7. **Side seal** UP5
8. **Bottom seal** UP4

AUTOMATION

When selecting the automatic electric operator, weight of the rolling shutter/door is to be taken into consideration. Tubular shafts are used, if the weight is from 1 up to 150 kg, shaft operators are used, if the weight is up to 500 kg.

Automatic electric operators can be equipped with an emergency unblocking or release, which enable to open by hand heavy rolling doors/ shutters easily and quickly.

TUBULAR ELECTRIC OPERATORS FOR ROLLING SHUTTERS

Electric Operator without Emergency Opening for Shaft RV40 (series 35)

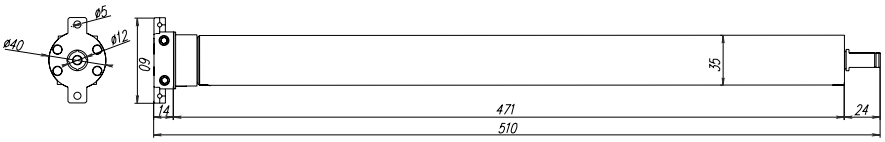

Electric operator	Torque Nm	Speed rpm	Tube diameter mm	Supply voltage V	Capacity W	Length L mm	End piece rotations	Continuous operation time	Ingress protection rating
RS10/17	10	17	35	220	121	510	41	4	IP44

Electric Operator without Emergency Opening for Shafts RV60 and RV70 (series 45)

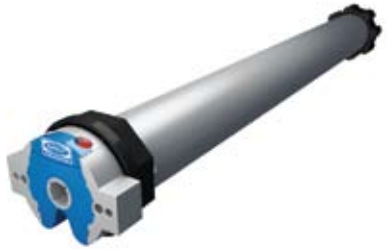

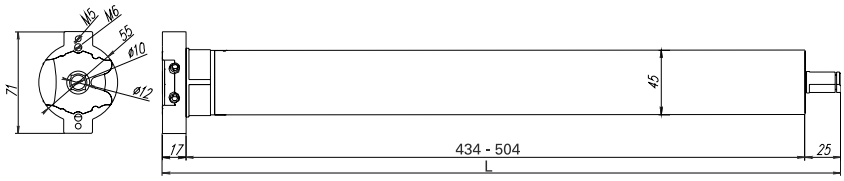

Electric operator	Torque Nm	Speed rpm	Tube diameter mm	Supply voltage V	Capacity W	Length L mm	End piece rotations	Continuous operation time	Ingress protection rating
RS10/15	10	15	45	220	112	475	23	4	IP44
RS20/15	20	15	45	220	145	475	23	4	IP44
RS30/15	30	15	45	220	191	545	23	4	IP44
RS40/15	40	15	45	220	170	545	23	4	IP44
RS50/12	50	12	45	220	191	545	23	4	IP44

Electric Operator with Emergency Opening for Shafts RV60 and RV70 (series 45M)

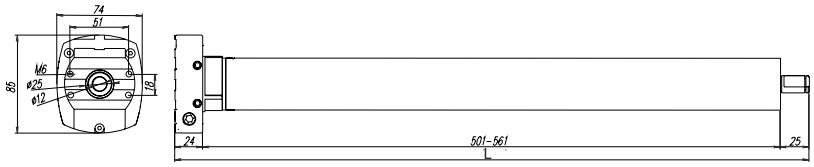

Electric operator	Torque Nm	Speed rpm	Tube diameter mm	Supply voltage V	Capacity W	Length L mm	End piece rotations	Continuous operation time	Ingress protection rating
RS10/15M	10	15	45	220	112	550	23	4	IP44
RS20/15M	20	15	45	220	145	550	23	4	IP44
RS30/15M	30	15	45	220	191	610	23	4	IP44
RS40/15M	40	15	45	220	170	610	23	4	IP44
RS50/12M	50	12	45	220	191	610	23	4	IP44

Electric Operator with Release for Shaft RV70 (series 45L)

Electric operator	Torque Nm	Speed rpm	Tube diameter mm	Supply voltage V	Capacity W	Length L mm	End piece rotations	Continuous operation time	Ingress protection rating
RS50/12L	50	12	45	220	191	685	22	4	IP44

Electric Operator without Emergency Opening for Shafts RV70 and RV102 (series 55)

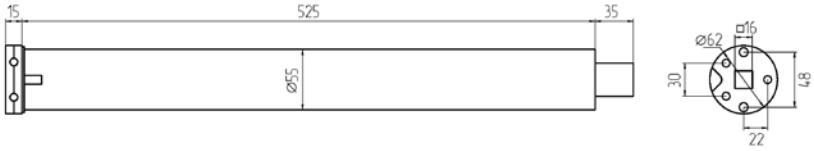

Electric operator	Torque Nm	Speed rpm	Tube diameter mm	Supply voltage V	Capacity W	Length L mm	End piece rotations	Continuous operation time	Ingress protection rating
RS60/12	60	12	55	220	320	562	22	4	IP44
RS80/12	80	12	55	220	396	572	22	4	IP44
RS100/10	100	10	55	220	385	572	22	4	IP44

Electric Operator with Emergency Opening for Shafts RV70 and RV102 (series 55M)

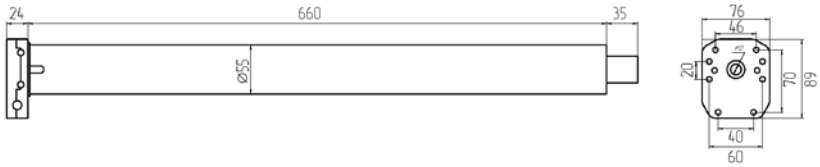

Electric operator	Torque Nm	Speed rpm	Tube diameter mm	Supply voltage V	Capacity W	Length L mm	End piece rotations	Continuous operation time	Ingress protection rating
RS60/12M	60	12	55	220	320	593	22	4	IP44
RS80/12M	80	12	55	220	396	613	22	4	IP44
RS100/10M	100	10	55	220	385	613	22	4	IP44

SHAFT OPERATORS FOR ROLLING SHUTTER DOORS AND STEEL ROLLING DOORS

Shaft Operator GFA SIK20.12

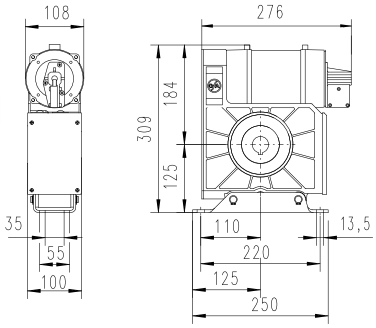

Pulling Power Table

ELEKTROMATEN Tube DIN 2448 (mm)	SIK 20.12 F (H)	Va (см/с)
101,6 x 3,6	2632	7,6

F(N) – pulling power
Va – initial speed

SPECIFICATIONS	SIK 20.12
Input torque	200 Nm
Speed output	12m-1
Hollow shaft diameter	30 mm
Motor capacity	0.40 kW
Working voltage, frequency	1x230 V, 50Hz
Motor current rating	5.4 A
Intensity	S 2 (5 minutes continuous operation)
Maximal amount of successive cycles per hour	12
Electrical wiring / fuse (slow)	3x1.52 /10A
End switch range	20
Maximal manual force NHK/KNH	75/200 N
Ingress protection rating	IP54
Electric operator weight	16 kg

Shaft Operators GFA SIK40.15 and GFA SIK55.15

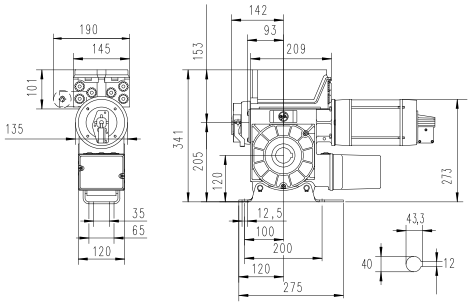

PULLING POWER TABLE				
ELECTROMATEN Tube DIN 2448 (mm)	**SI 40.15 F (H) va (см/с)**		**SI55.15 F(H) Va(см/с)**	
159,0 x 4,5	3575	14,1	4916	14,1

SPECIFICATIONS	SI 40.15	SI 55.15
Input torque	400 Nm	550 Nm
Speed output	15 m^{-1}	
Hollow shaft diameter	40 mm	
Catching moment	1020 Nm	1400 Nm
Motor capacity	1,10 kW	
Working voltage, frequency	3x230/400 V, 50Hz	
Motor current rating	4,6/2,7 A	7,3/4,2 A
Intensity	S 3 60 %	
Maximal amount of successive cycles per hour	16	
Electrical wiring / fuse (slow)	5x1,5²/10A	
End switch range	20 (60, 110)	
Maximal manual force NHK/KNH	130/75 N	285/165 N
Ingress protection rating	IP54	
Electric operator weight	28 kg	30 kg

Selection of the electric operator in each instance is performed by the worker of the company DoorHan by means of a special computer program.

When laying electrical wiring, position of group control units and wire configuration shall be taken into consideration.

TECHNICAL CHARACTERISTICS OF HARDWARE FOR ROLLING SHUTTERS AND ROLLING SHUTTER DOORS

FOAM–FILLED PROFILES

Technical Characteristics of Foam–Filled Profiles

Name	Size	Colour	Weight 1m2 kg	Foam density kg/m³	Amount per 1 m leaf height
RH45, RH45P – perforated (with soft foam filler)	7.3x45	signal white, sepia brown, agate grey, light ivory, moss green, signal blue, wine red, white aluminium	2.22	52.0	22.22
RHT45 (with hard foam-filler)	7.3x45	signal white, sepia brown, agate grey, light ivory, moss green, signal blue, wine red, white aluminium	2.64	245.00	22.22

Leaf Winding Parameters of Rolling Shutters and Rolling Shutter Doors

Article of shaft	Type of kitting	Article of protective housing											
		RB137		RB 150		RB 165		RB 180		RB 205		RB 250	
		Amount of straps						Leaf height					
		min.*	max.	min.*	max.	min.*	max.	min.*	max.	min.*	max.	min.*	max.
Used profiles		RH45, RH45P, RHT45											
RV40	Traction spring	29	30	34	35	41	42	52	53	81	82	123	124
		1305	1350	1620	1665	2070	2115	2565	2610	3645	3690	5535	5580
	Traction spring + ring KD60	28	29	34	35	40	41	54	55	83	84	125	126
		1260	1305	1530	1575	1980	2025	2655	2700	3735	3780	5625	5670
	Automatic lock RM2	24	25	28	29	36	37	48	49				
		1080	1125	1260	1305	1665	1710	2385	2430				
	Automatic lock RM3									77	78	119	120
										3465	3510	5355	5400
RV60	Traction spring	25	26	34	35	40	41	48	49	77	78	120	122
		1125	1170	1530	1575	1800	1845	2385	2430	3465	3510	5400	5490
	Traction spring + ring KD60	25	26	33	34	40	41	50	51	79	81	122	123
		1125	1170	1485	1530	1890	1935	2475	2520	3555	3645	5490	5535
	Automatic lock RM2	18	19	25	26	35	36	48	49				
		810	855	1125	1170	1575	1620	2160	2205				
	Automatic lock RM3									74	75	118	120
										3330	3375	5310	5400

* If the indicated amount is exceeded, friction in the housing occurs.

Kitting: traction spring

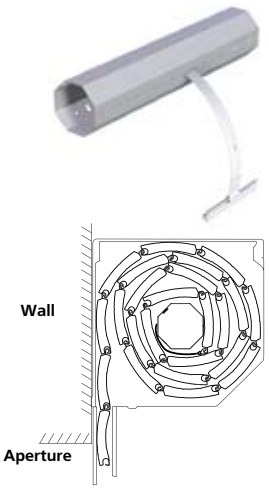

Kitting: traction spring and rings

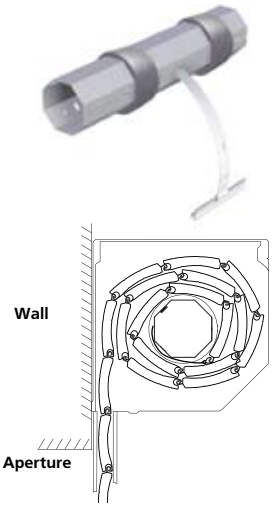

Kitting: upper automatic lock assembly

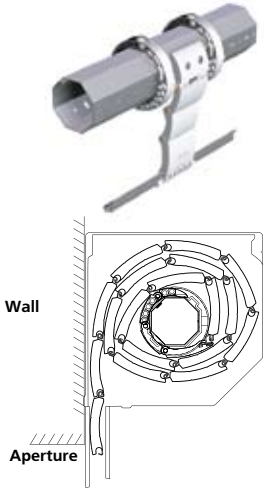

Technical Characteristics of Foam–Filled Profiles

Name	Size	Colour	Weight 1m2 kg	Foam density kg/m³	Amount per 1 m leaf heigt
RH58, RH58P – perforated (with soft foam filler)	10.9x58	signal white, sepia brown, agate grey, light ivory	2,59	52,00	17,24
RHT45 (with hard foam-filler)	10.9x58	signal white, sepia brown, agate grey, light ivory	3,41	245,00	17,24

Leaf Winding Parameters of Rolling Shutters and Rolling Shutter Doors

Article of shaft	Type of kitting	Article of protective housing							
		RB180		RB 205		RB 250		RB 300	
		Amount of straps				Leaf height			
		min.*	max.	min.*	max.	min.*	max.	min.*	max.
Used profiles		RH58, RH58P, RHT58							
RV60	Traction spring	26	28	41	43	61	62	97	98
		1508	1624	2378	2494	3538	3596	5626	5684
	Automatic lock RB2	26	28						
		1508	1624						
	Automatic lock RB3			35	36	55	57		
				2030	2088	3190	3306		
	Automatic lock RB4							99	101
								5742	5858
	Traction spring + ring KD60	25	27	40	41	62	63	99	101
		1450	1566	2320	2378	3596	3654	5742	5858
RV70	Traction spring			36	38	61	63	95	96
				2088	2204	3538	3654	5510	5568
	Automatic lock RB3			32	34	53	55		
				1856	1972	3074	3190		
	Automatic lock RB4							91	93
								5278	5394
	Traction spring + ring KD60			37	39	60	62	98	99
				2146	2262	3480	3596	5684	5742

* If the indicated amount is exceeded, friction in the housing occurs

Kitting: traction spring

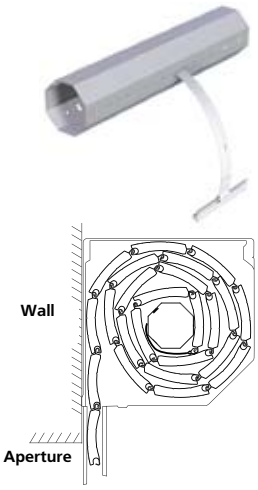

Kitting: traction spring and rings

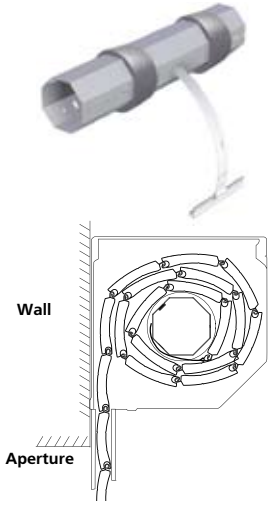

Kitting: upper automatic lock assembly

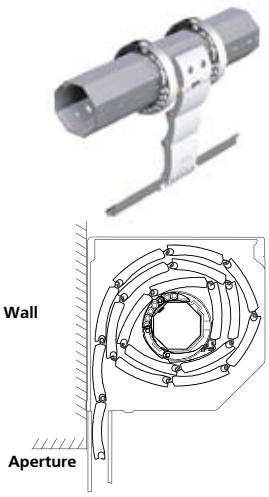

Technical Characteristics of Foam–Filled Profiles

Name	Size	Colour	Weight 1m2 kg	Foam density kg/m3	Amount per 1 m leaf heigt
RH77, RH58P – perforated (with soft foam filler)	18.5x77	signal white, sepia brown, agate grey, light ivory	4.55	52.0	13.00
RHT77 (with hard foam-filler)	18.5x77	signal white, sepia brown, agate grey, light ivory	6.5	245.00	13.00

Leaf Winding Parameters of Rolling Shutters and Rolling Shutter Doors

Article of shaft	Type of kitting	Article of protective housing						
		RB150	RB165	RB180	RB205	RB250	RB300	RB375
		Amount of straps				Leaf height		
		min.* max.	min.* max.	min.* max.	min.* max.	min.* max.	min.* max.	min.* max.
Used profiles		RH77, RHT77						
RV60	Traction spring	22 23					34 35	
		1694 1771					2618 2695	
	Automatic lock RB3	18 19					35 37	
		1386 1463					2695 2849	
	Automatic lock RB4	18 19					35 36	
		1386 1463					2695 2772	
	Traction spring + ring KD60	18 19					34 37	
		1866 1463					2618 2849	
RV70	Traction spring	18 20					34 37	
		1866 1540					2618 2849	
	Automatic lock RB3	19 20					35 36	
		1463 1540					2695 2772	
	Automatic lock RB4	19 20					35 36	
		1463 1540					2695 2772	
	Traction spring + ring KD60	19 20					37 39	62
		1463 1540					2849 3003	4774
RV102							38	62
							2926	4774

* If the indicated amount is exceeded, friction in the housing occurs

Kitting: traction spring

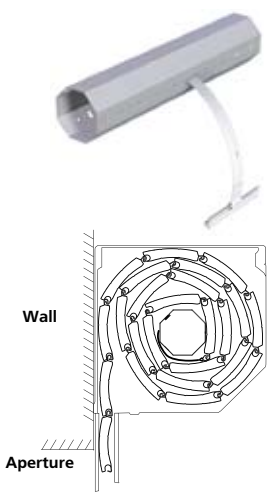

Kitting: traction spring and rings

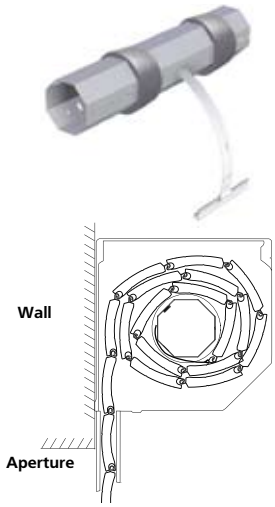

Kitting: upper automatic lock assembly

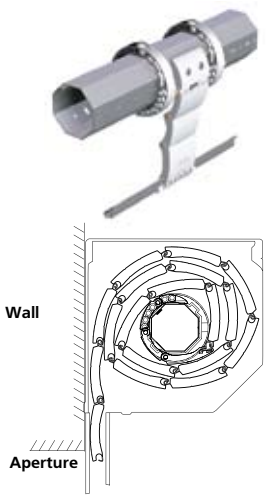

EXTRUDED PROFILES

Technical Characteristics of Extruded Profiles

Name	Size	Colour	Weight 1m2 kg	Amount per 1 m leaf height
RHE45	9x45	signal white, sepia brown, agate grey, light ivory, moss green, signal blue, wine red, white aluminium	5.49	22.22

Leaf Winding Parameters of Rolling Shutters and Rolling Shutter Doors

Article of shaft	Type of kitting	Article of protective housing											
		RB137		RB150		RB165		RB180		RB205		RB250	
		Amount of straps								Leaf height			
		min.*	max.	min.*	max.	min.*	max.	min.*	max.	min.*	max.	min.*	max.
Used profiles		RH45											
RV40	Traction spring	22	26	33	34	39	42	53	55	69	70		
		1125	1170	1485	1530	1755	1890	2385	2475	3105	3150		
	Automatic lock RM2	19	21	20	21	28	30	33	34				
		855	945	900	945	1260	1350	1485	1530				
	Automatic lock RM3									51	52	102	103
										2295	2340	4590	4635
	Traction spring + ring KD60	22	25	22	25	39	40	49	50	63	64	116	117
		1080	1125	990	1125	1755	1800	2205	2250	2835	2880	5220	5265
RV60	Traction spring					40	41	49	50	64	66	105	106
						1800	1845	2205	2250	2880	2970	4725	4770
	Automatic lock RM2					25	26	34	36				
						1125	1170	1530	1620				
	Automatic lock RM3									56	57	95	97
										2520	2565	4275	4365
	Traction spring + ring KD60					33	34	47	49	61	65	114	116
						1485	1530	2115	2205	2745	2925	5130	5220
RV70	Traction spring							41	42	64	65	92	93
								1845	1890	2880	2925	4140	4185
	Automatic lock RM2									50	51		
										2250	2295		
	Automatic lock RM3									50	51	82	91
										2250	2295	3690	4095
	Traction spring + ring KD70							38	40	57	60	112	114
								1710	1800	2565	2700	5040	5130

* If the indicated amount is exceeded, friction in the housing occurs

Kitting: traction spring

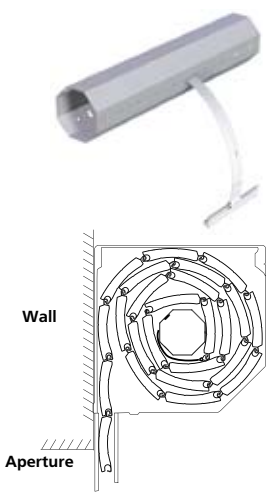

Kitting: traction spring and rings

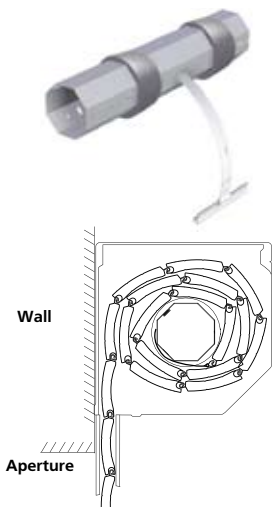

Kitting: upper automatic lock assembly

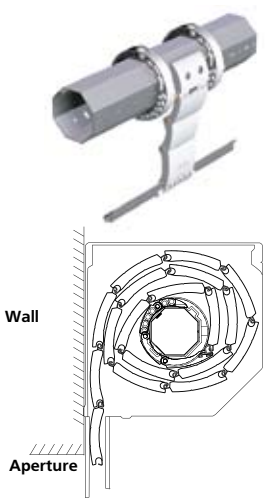

Technical Characteristics of Extruded Profiles

Name	Size	Colour	Weight 1m2 kg	Amount per 1 m leaf height
RHE55	13.5x55	signal white, sepia brown, agate grey, light ivory, moss green, signal blue, wine red, white aluminium	6.13	18.20

Leaf Winding Parameters of Rolling Shutters and Rolling Shutter Doors

Article of shaft	Type of kitting	Article of protective housing						
		RB150	RB165	RB180	RB205	RB250	RB300	RB375
		Amount of straps				Leaf height		
		min.* max.	min.* max.	min.* max.	min.* max.	min.* max.	min.* max.	min.* max.
Used profiles					RHE55			
RV60	Traction spring			26 27	35 36	49 50	83 86	
				1430 1485	1925 1980	2695 2750	4665 4730	
	Automatic lock RB2			20 21				
				1100 1155				
	Automatic lock RB3				30 33	52 54		
					1650 1815	2860 2970		
	Automatic lock RB4					51 52	81 86	
						2805 2860	4455 4730	
	Traction spring + ring KD60			21 22	30 31	51 52	82 86	
				1155 1210	1650 1815	2805 2860	4510 4730	
RV70	Traction spring				28 30	57 59	83 85	
					1540 1650	3135 3245	4665 4675	
	Automatic lock RB3				29 30	52 54		
					1595 1650	2860 2970		
	Automatic lock RB4					51 54	82 89	
						2805 2970	4510 4895	
	Traction spring + ring KD60				31 32	54 55	80 83	110
					1815 1870	2970 3025	4400 4665	6050
RV102							85	110
							4675	6050

* If the indicated amount is exceeded, friction in the housing occurs

Kitting: traction spring

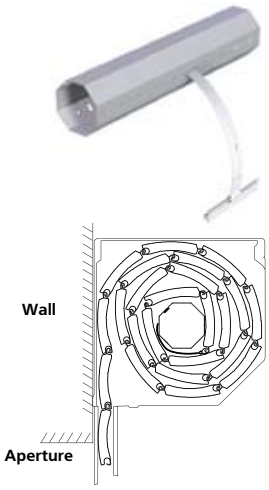

Kitting: traction spring and rings

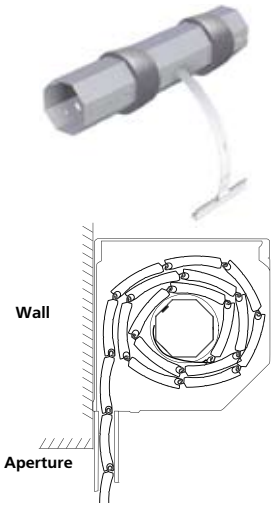

Kitting: upper automatic lock assembly

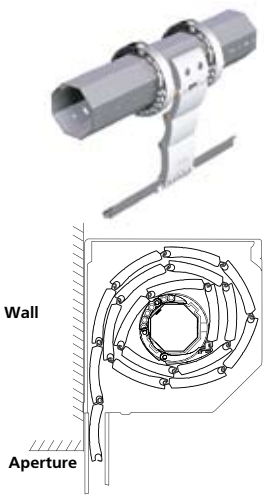

Technical Characteristics of Extruded Profiles

Name	Size	Colour	Weight 1m2 kg	Amount per 1 m leaf height
RHE56G	9x56	signal white, sepia brown, agate grey, light ivory, moss green, signal blue, wine red, white aluminium	5.55	17.86
RHE56	9x56	signal white, sepia brown, agate grey, light ivory, moss green, signal blue, wine red, white aluminium	8.14	17.86

Leaf Winding Parameters of Rolling Shutters and Rolling Shutter Doors

Article of shaft	Type of kitting	Article of protective housing									
		RB165		RB180		RB205		RB250		RB300	
		Amount of straps					Leaf height				
		min.*	max.	min.*	max.	min.*	max.	min.*	max.	min.*	max.
Used profiles		RHE56, RHE56G									
RV60	Automatic lock RB2	12	13	25	26						
		672	728	1400	1456						
	Automatic lock RB3					42	43	60	62		
						2352	2408	3360	3472		
	Traction spring + ring KD60	27	28	35	36	50	51	81	82		
		1512	1568	1960	2016	2800	2556	4536	4592		
RV70	Automatic lock RB2			21	22						
				1176	1232						
	Automatic lock RB3					38	39	61	62	103	104
						2128	2184	3416	3472	5770	5824
	Traction spring + ring KD60			36	37	50	51	81	82	115	117
				2016	2072	2800	2856	4536	4592	6440	6552
RV102						39		72		107	
						2185		4030		5990	

* If the indicated amount is exceeded, friction in the housing occurs

PROTECTIVE HOUSINGS, GUIDES AND SIDE FRAMES

TECHNICAL CHARACTERISTICS OF PROTECTIVE HOUSINGS (SQUARE)

Name	Size	Material	Colour	Weight of 1run.m kg
RB137	150X137	aluminium	signal white, sepia brown, agate grey, light ivory	1.095
RB150	150X150	aluminium	signal white, sepia brown, agate grey, light ivory	1.173
RB165	165X165	aluminium	signal white, sepia brown, agate grey, light ivory, moss green, signal blue, wine red, white aluminium	1.289
RB180	180X180	aluminium	signal white, sepia brown, agate grey, light ivory, moss green, signal blue, wine red, white aluminium	1.407
RB205	205X205	aluminium	signal white, sepia brown, agate grey, light ivory, moss green, signal blue, wine red, white aluminium	1.781
RB250	250X250	aluminium	signal white, sepia brown, agate grey, light ivory	2.140
RB300	300X300	aluminium	signal white, sepia brown, agate grey, light ivory	2.563
RB375	375	aluminium	signal white, sepia brown, agate grey, light ivory	2.266

TECHNICAL CHARACTERISTICS OF PROTECTIVE HOUSINGS (ROUND AND HALF-ROUND)

Name	Size	Colour	Weight of 1m kg
RBE165D	165X165	signal white, sepia brown, agate grey, light ivory, moss green, signal blue, wine red, white aluminium	1.842
RBE180D	180X180	signal white, sepia brown, agate grey, light ivory, moss green, signal blue, wine red, white aluminium	1.894
RBE205D	205X205	signal white, sepia brown, agate grey, light ivory, moss green, signal blue, wine red, white aluminium	1.098
RBE165R	165X165	signal white, sepia brown, agate grey, light ivory, moss green, signal blue, wine red, white aluminium	2.007
RBE180R	180X180	signal white, sepia brown, agate grey, light ivory, moss green, signal blue, wine red, white aluminium	2.064
RBE205R	205X205	signal white, sepia brown, agate grey, light ivory, moss green, signal blue, wine red, white aluminium	2.106

TECHNICAL CHARACTERISTICS OF GUIDE PROFILES

Name	Size	Colour	Weight of 1run.m kg	Used for
RG53	21.6x53	signal white, sepia brown, agate grey, light ivory, moss green, signal blue, wine red, white aluminium	0.469	For profiles up to 9 mm and side frames (caps) RK137, RK150, RK165, RK180, RK205, RK205S, RK165D, RK165R, RK180D, RK180R, RK205D, RK205R
RG65	26.4x65	signal white, sepia brown, agate grey, light ivory	0.661	For profiles up to 14 mm and side frames (caps) RK137, RK150, RK165, RK180, RK205, RK205S, RK165D, RK165R, RK180D, RK180R, RK205D, RK205R
RG70	26x70	signal white, sepia brown, agate grey, light ivory	0.587	For profiles up to 14 mm and side frames (caps) RK250, RK300 and RK375
RG90	37x90	signal white, sepia brown, agate grey, light ivory	1.211	For profiles up to 19 mm and side frames (caps) RK250, RK300 and RK375

TECHNICAL CHARACTERISTICS OF SIDE FRAMES

Name	Size	Colour	Weight of 1 pair kg	Used guides
RK137	137X137	signal white, sepia brown, agate grey, light ivory	0.580	RG53, RG65, RG53B, RG65B, RG60BS
RK150	150X150	signal white, sepia brown, agate grey, light ivory	0.6	RG53, RG65, RG53B, RG65B, RG60BS
RK165	165X165	signal white, sepia brown, agate grey, light ivory	0.7	RG53, RG65, RG53B, RG65B, RG60BS
RK165D	165X165	signal white, sepia brown, agate grey, light ivory, moss green, signal blue, wine red, white aluminium	0.7	RG53, RG65, RG53B, RG65B, RG60BS
RK165R	165X165	signal white, sepia brown, agate grey, light ivory, moss green, signal blue, wine red, white aluminium	0.7	RG53, RG65, RG53B, RG65B, RG60BS
RK180	180X180	signal white, sepia brown, agate grey, light ivory, moss green, signal blue, wine red, white aluminium	0.8	RG53, RG65, RG53B, RG65B, RG60BS
RK180D	180X180	signal white, sepia brown, agate grey, light ivory, moss green, signal blue, wine red, white aluminium	0.8	RG53, RG65, RG53B, RG65B, RG60BS
RK180R	180X180	signal white, sepia brown, agate grey, light ivory, moss green, signal blue, wine red, white aluminium	0.8	RG53, RG65, RG53B, RG65B, RG60BS
RK205	205X205	signal white, sepia brown, agate grey, light ivory, moss green, signal blue, wine red, white aluminium	1.0	RG53, RG65, RG53B, RG65B, RG60BS
RK250D	205X205	signal white, sepia brown, agate grey, light ivory, moss green, signal blue, wine red, white aluminium	1.0	RG53, RG65, RG53B, RG65B, RG60BS
RK205R	205X205	signal white, sepia brown, agate grey, light ivory, moss green, signal blue, wine red, white aluminium	1.0	RG53, RG65, RG53B, RG65B, RG60BS
RK250	250X250	signal white, sepia brown, agate grey, light ivory	1.9	RG70,RG90,RG70B
RK250S	250X250	signal white, sepia brown, agate grey, light ivory	1.3	RG53, RG65, RG53B, RG65B, RG60BS
RK300	300X300	signal white, sepia brown, agate grey, light ivory	2.3	RG70,RG90,RG70B
RK375	375X375	signal white, sepia brown, agate grey, light ivory	11.38	RG70,RG90,RG70B

TECHNICAL CHARACTERISTICS OF HARDWARE FOR STEEL ROLLING DOORS

TECHNICAL CHARACTERISTICS OF STEEL PROFILES

Name	Size	Weight of 1 m2, kg	Amount per 1 m leaf height
RHS117	117	13,6	10,00
RHS117P	117	12	10,00
RHS117G	117	10,6	10,00

TECHNICAL CHARACTERISTICS OF GUIDE PROFILE

Name	Size	Weight of 1 run.m, kg
RG95S	95x60	6,00

TABLE OF STEEL ROLLING DOOR DIMENSIONS

Door height \ Door width	2250	2500	2750	3000	3250	3500	3750	4000	4250	4500	4750	5000	5250	5500	5750	6000	6250	6500	6750	7000	7250	7500	7750	8000	8250	8500	8750	9000
2250	524 615	524 615	524 615	542 615	554 615	554 615	554 615	580 615	590 615	590 615	590 615	620 615	620 615	626 615	626 615	626 615	662 615	662 615	662 615	662 615	662 615	662 615	696 615	696 615				
2500	524 615	524 615	524 615	542 615	554 615	554 615	554 615	580 615	590 615	590 615	590 615	620 615	620 615	626 615	626 615	626 615	662 615	662 615	662 615	662 615	662 615	662 615	696 615	696 615				
2750	524 615	524 615	524 615	542 615	542 615	554 615	554 615	580 615	590 615	590 615	590 615	620 615	620 615	626 615	626 615	626 615	662 615	662 615	662 615	662 615	662 615	662 615	696 615	696 615				
3000	524 615	524 615	524 615	542 615	542 615	554 615	554 615	580 615	590 615	590 615	590 615	620 615	620 615	626 615	626 615	626 615	662 615	662 615	662 615	662 615	662 615	662 615	696 615	696 615				
3250	524 615	524 615	524 615	542 615	542 615	554 615	554 615	580 615	590 615	590 615	590 615	620 615	620 615	626 615	626 615	626 615	662 615	662 615	662 615	662 615	662 615	662 615	696 615	696 615				
3500	524 615	524 615	524 615	542 615	542 615	554 615	554 615	580 615	590 615	590 615	590 615	620 615	620 615	626 615	626 615	626 615	662 615	662 615	662 615	662 615	662 615	662 615	662 615	662 615				
3750	524 615	524 615	524 615	542 615	554 615	554 615	554 615	580 615	590 615	590 615	590 615	620 615	620 615	626 615	626 615	626 615	662 615	662 615	662 615	662 615	662 615	662 615	662 615	662 615				
4000	524 615	524 615	524 615	542 615	554 615	554 615	554 615	580 615	590 615	590 615	590 615	620 615	620 615	626 615	626 615	626 615	662 615	662 615	662 615	662 615	662 615	662 615	662 615	662 615				
4250	524 615	524 615	524 615	542 615	554 615	554 615	554 615	580 615	590 615	590 615	590 615	620 615	620 615	626 615	626 615	626 615	662 615	662 615	662 615	662 615	662 615	662 615	662 615	662 615				
4500	524 615	524 615	524 615	542 615	554 615	554 615	554 615	580 615	590 615	590 615	590 615	620 615	620 615	626 615	626 615	626 615	626 615	626 615	626 615	626 615	626 615	626 615	626 615					
4750	524 615	524 615	524 615	542 615	554 615	554 615	554 615	580 615	590 615	590 615	590 615	620 615	620 615	626 615	626 615	626 615	626 615	626 615	626 615	626 615								
5000	524 615	524 615	524 615	542 615	554 615	554 615	554 615	580 615	590 615	590 615	590 615	620 615	620 615	626 615	626 615	626 615	626 615	626 615	626 615									
5250	524 615	524 615	524 615	542 615	554 615	554 615	554 615	580 615	590 615	590 615	590 615	620 615	620 615	620 615	620 615	620 615	620 615	620 615										
5500	524 615	524 615	524 615	542 615	554 615	554 615	554 615	580 615	590 615	590 615	590 615	590 615	590 615	590 615	590 615	590 615	590 615											
5750	524 615	524 615	524 615	542 615	554 615	554 615	554 615	580 615	580 615	580 615	580 615	580 615	580 615	580 615	580 615	580 615												
6000	524 615	524 615	524 615	542 615	554 615	586 615	614 615	614 615	614 615	614 615	614 615	614 615	614 615	614 615	614 615													
6250	620 615	620 615	874 615	682 615	682 615	682 615	682 615	682 615	682 615	682 615	682 615	682 615	682 615															
6500	620 615	642 615	674 615	682 615	682 615	682 615	682 615	682 615	682 615	682 615	682 615	682 615																
6750	642 615	642 615	674 615	682 615	682 615	682 615	682 615	682 615	682 615	682 615	682 615																	
7000	642 615	642 615	674 615	682 615	682 615	682 615	682 615	682 615	682 615	682 615																		
7250	642 615	642 615	674 615	682 615	682 615	682 615	682 615	682 615	682 615																			
7500	642 615	642 615	674 615	674 615	674 615	674 615	674 615	674 615	674 615																			
7750	642 615	642 615	674 615	674 615	674 615	674 615	674 615	674 615	674 615																			
8000	642 615	642 615	674 615	674 615	674 615	674 615	674 615	674 615	674 615																			

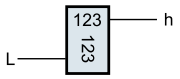

h – lintel

L – minimal mounting depth

Door width

BASE PACKAGE AND OPTIONS

Base Package:
- leaf consisting of profiles,
- guides (type depends on profile quantity),
- housing (not installed on steel rolling doors),
- electric operator and hardware,
- electric operator control elements

Options:
- control units
- remote control units
- remote control stations
- lock
- emergency opening device

ACCESSORIES FOR ROLLING SHUTTERS AND ROLLING SHUTTER DOORS

- Lock and catch (enable fixation of the leaf in closed position, increase reliability of rolling shutters and rolling shutter doors and prevent unauthorized opening).
- Handle (makes easier manual opening of rolling shutters and rolling shutter doors).

ACCESSORIES FOR AUTOMATION

Protection and safety devices for tubular operators:
- switches
- key-button
- control units
- remote control station

Protection and safety devices for shaft operators:
- photocells
- signal lamps
- optosensors
- sensors

Control devices for tubular and shaft operators:
- radio receiver (allows to open/close rolling shutters and rolling door from remote controls or from stationary control);
- CV-units allow to combine electric operators (for example positioned on different floors) in one group and to control them simultaneously by pushing one button;
- Optional control devices (controls, receivers, magnetic hinges, sensor-radar, key-button, switches, control stations, GSM-modules, card-readers, magnetic cards).

Example of Connecting Diagram for Electrical Lock and External Radio Control to RollHan CV_

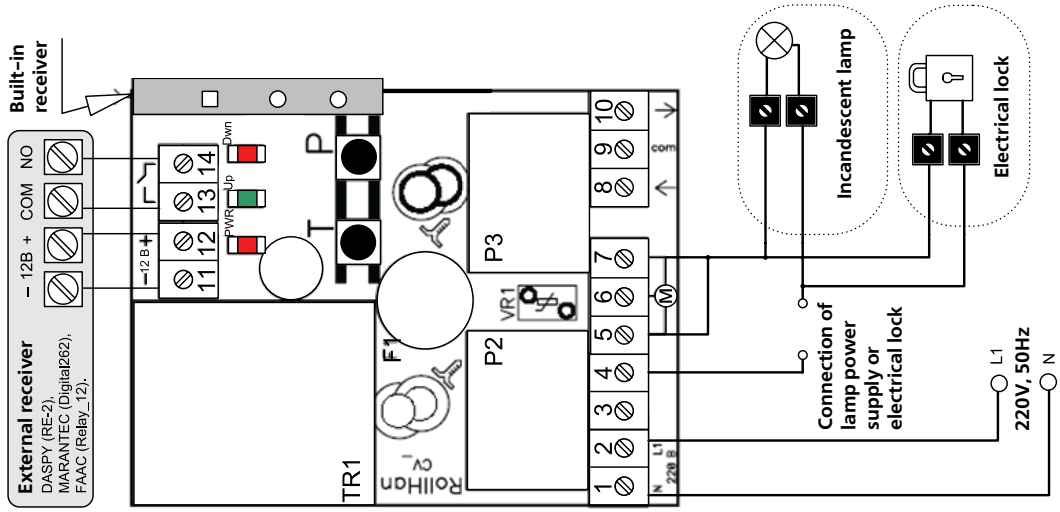

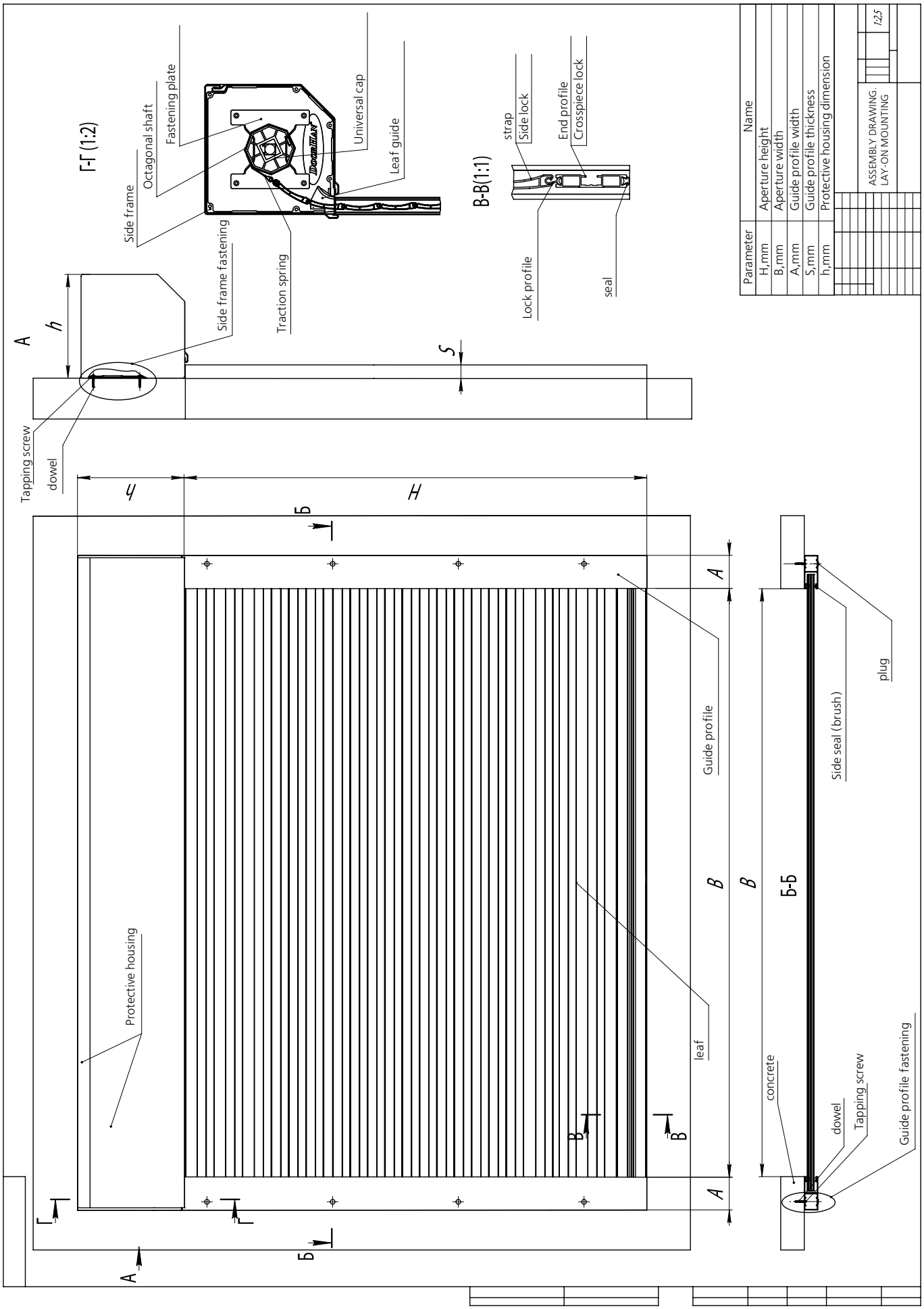

Parameter	Name
H,mm	Aperture height
B,mm	Aperture width
A,mm	Guide profile width
S,mm	Guide profile thickness
h,mm	Protective housing dimension

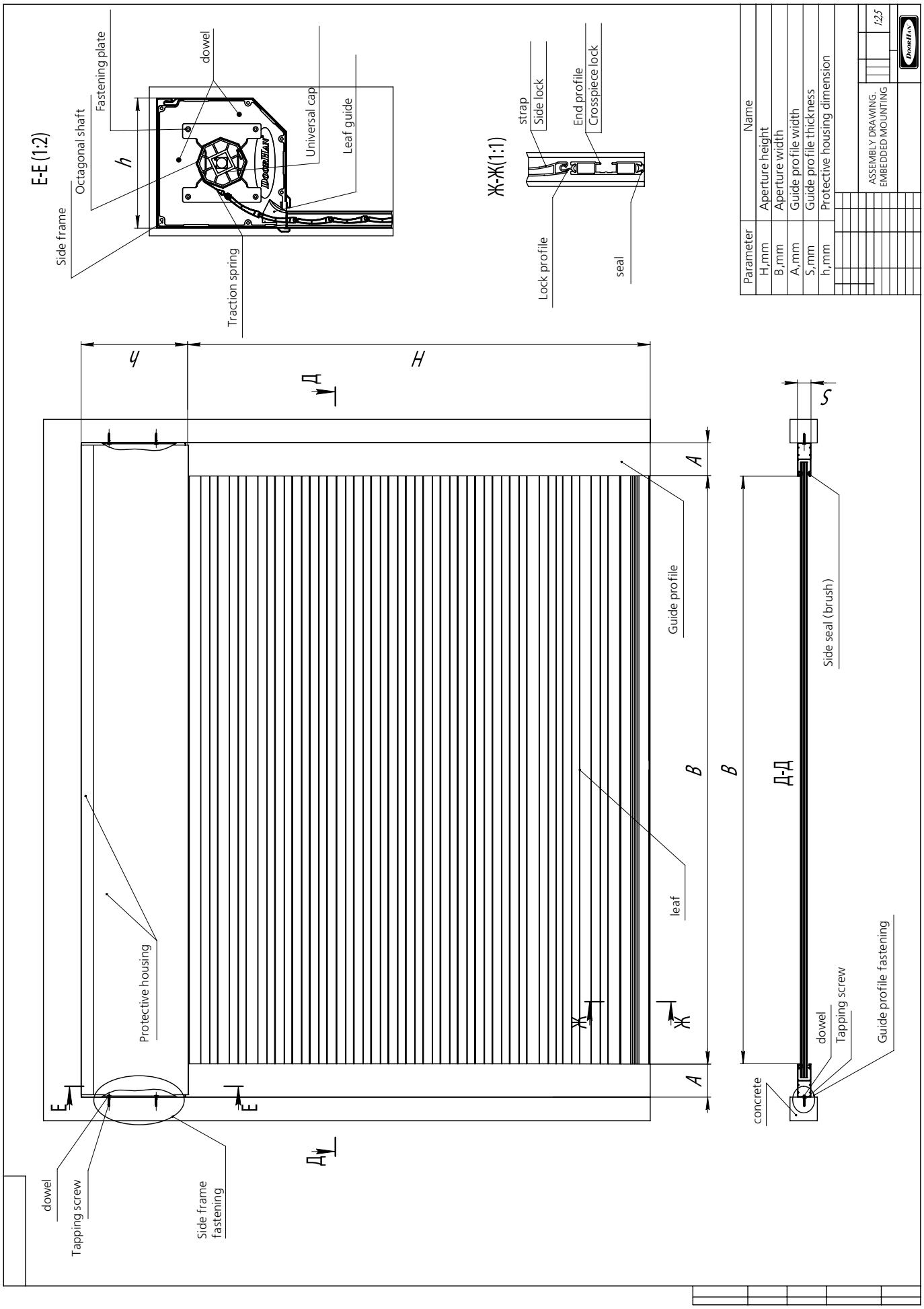
E-E (1:2)
Fastening plate
dowel
Octagonal shaft
Universal cap
Leaf guide
h
Side frame
Traction spring
Ж-Ж(1:1)
strap
Side lock
End profile
Crosspiece lock
Lock profile
seal
Parameter
Name
H,mm
Aperture height
B,mm
Aperture width
A,mm
Guide profile width
S,mm
Guide profile thickness
h,mm
Protective housing dimension
ASSEMBLY DRAWING. EMBEDDED MOUNTING
1:2,5
ч
H
Д
A
B
S
Guide profile
leaf
Protective housing
Side seal (brush)
Д-Д
Ж
E
dowel
Tapping screw
Side frame fastening
concrete
Guide profile fastening

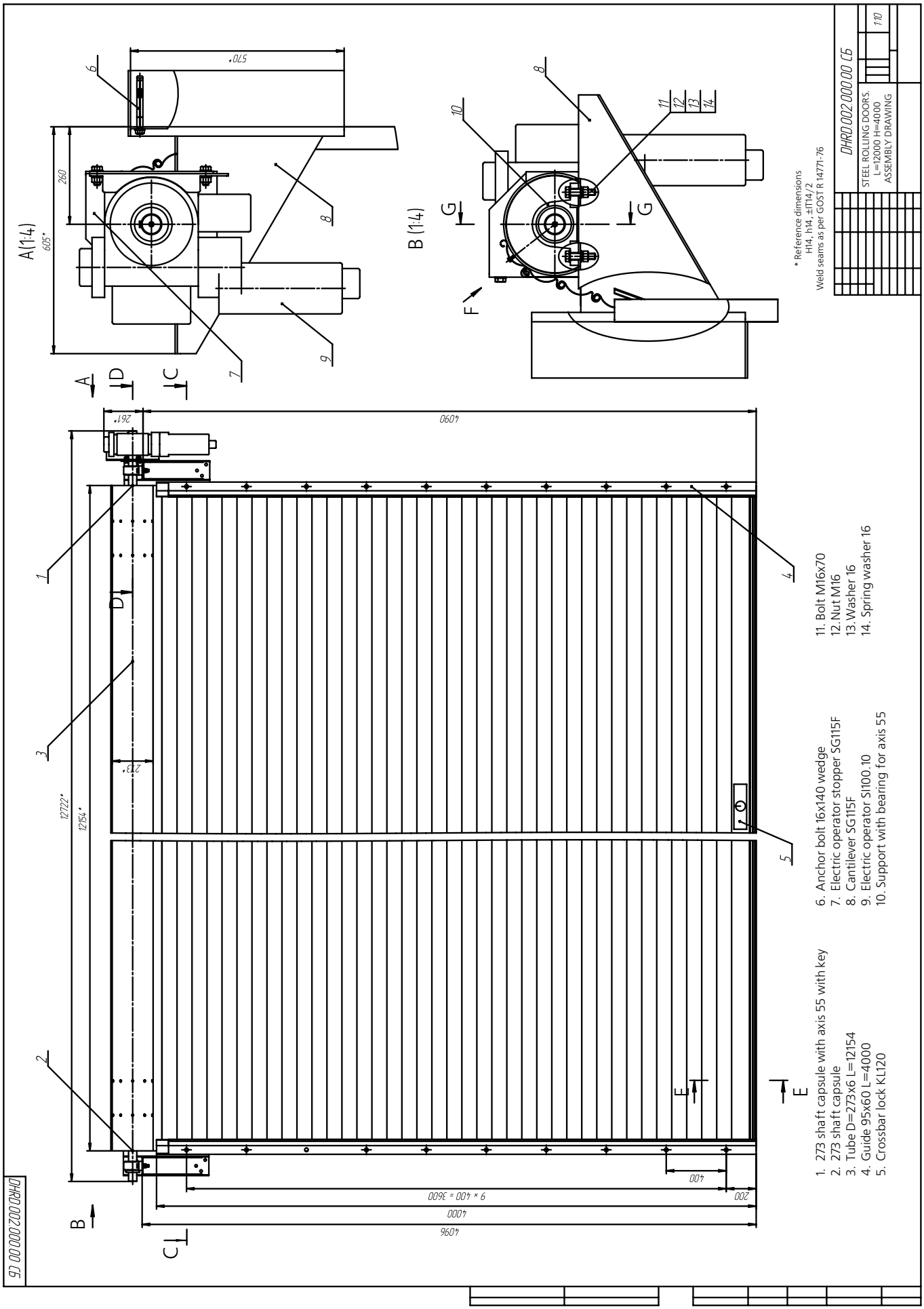
A(1:4)
B (1:4)
570*
605*
260
261*
4090
12722*
12154*
273*
400
9 × 400 = 3600
200
4000
4096
1. 273 shaft capsule with axis 55 with key
2. 273 shaft capsule
3. Tube D=273x6 L=12154
4. Guide 95x60 L=4000
5. Crossbar lock KL120
6. Anchor bolt 16x140 wedge
7. Electric operator stopper SG115F
8. Cantilever SG115F
9. Electric operator SI100.10
10. Support with bearing for axis 55
11. Bolt M16x70
12. Nut M16
13. Washer 16
14. Spring washer 16
* Reference dimensions
H14, h14, ±IT14/2
Weld seams as per GOST R 14771-76
DHRD 002 000 00 CB
STEEL ROLLING DOORS.
L=12000 H=4000
ASSEMBLY DRAWING
1:10
DHRD 002 000 00 CB

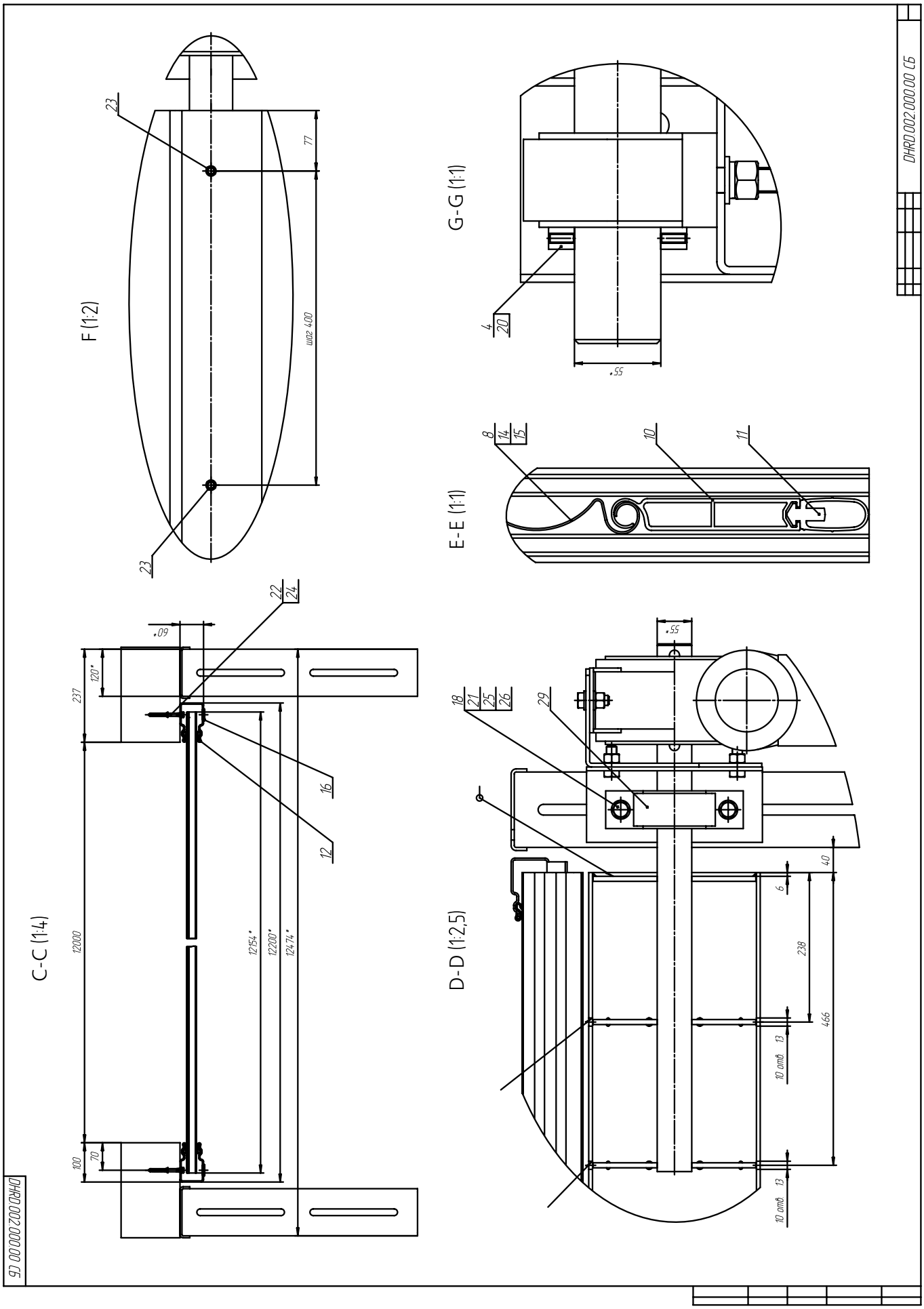
F (1:2)
G-G (1:1)
E-E (1:1)
C-C (1:4)
D-D (1:2,5)
DHRD.002.000.00 СБ
DHRD.002.000.00 СБ

СИСТЕМА СЕРТИФИКАЦИИ ГОСТ Р
ГОССТАНДАРТ РОССИИ

Добровольная сертификация

СЕРТИФИКАТ СООТВЕТСТВИЯ

№ РОСС RU.СЛ34.Н00624

Срок действия с 22.09.2008 по 04.04.2010

0821864

ОРГАН ПО СЕРТИФИКАЦИИ

РОСС RU.0001.11СЛ34 от 26.09.06
ОРГАН ПО СЕРТИФИКАЦИИ ОКОННОЙ И ДВЕРНОЙ ТЕХНИКИ (ОС ОДТ)
Россия, 127238, г. Москва, Локомотивный пр. 21
тел./факс (495) 482-31-98

ПРОДУКЦИЯ

Ворота роллетные из металлических профилей роликовой прокатки
Выпускаются по ГОСТ 31174-2003
Серийный выпуск
См. приложение

код ОК 005 (ОКП): 52 8480

СООТВЕТСТВУЕТ ТРЕБОВАНИЯМ НОРМАТИВНЫХ ДОКУМЕНТОВ

ГОСТ 31174-2003, ТУ 5285-001-96279372-2008

код ТН ВЭД: 7308 30 000 0

ИЗГОТОВИТЕЛЬ ООО «ДОРХАН – роллетные системы», ИНН 5032190466
Россия, 143002, Московская обл., Одинцовский р-н, с Акулово, промзона, д.6,
27 км. Можайского шоссе, тел. 933-24-00, факс 937-95-50
Адрес производства продукции: тот же

СЕРТИФИКАТ ВЫДАН

ООО «ДОРХАН-роллетные системы»

НА ОСНОВАНИИ

Протокола сертификационных испытаний №12/2 от 27.03.08
ИЦ «Замок», г. Москва, РОСС RU.0001.21СЛ41 от 26.09.06.

ДОПОЛНИТЕЛЬНАЯ ИНФОРМАЦИЯ

Сертификация по схеме 3

М.П.

Руководитель органа _____ (подпись) Т.В. Власова (инициалы, фамилия)

Эксперт _____ (подпись) Л.В. Воронкова (инициалы, фамилия)

Сертификат не применяется при обязательной сертификации

СИСТЕМА СЕРТИФИКАЦИИ ГОСТ Р
ГОССТАНДАРТ РОССИИ

1687458

ПРИЛОЖЕНИЕ

К сертификату соответствия № РОСС RU.СЛ34.Н00624 от 22.09.2008

Перечень конкретной продукции, на которую распространяется действие сертификата соответствия

код ОК 005 (ОКП) / код ТН ВЭД СНГ	Наименование и обозначение продукции, ее изготовитель	Обозначение документации, по которой выпускается продукция
52 8480 7308 30 000 0	Ворота роллетные из металлических профилей роликовой прокатки: - из алюминиевых сплавов - из стальной ленты	ГОСТ 31174-2003

ООО «ДОРХАН – роллетные системы»

М.П.

Руководитель органа _____ Т.В. Власова
подпись инициалы, фамилия

Эксперт _____ Л.В. Воронкова
подпись инициалы, фамилия

СИСТЕМА СЕРТИФИКАЦИИ ГОСТ Р
ГОССТАНДАРТ РОССИИ

Добровольная сертификация

СЕРТИФИКАТ СООТВЕТСТВИЯ

№ РОСС RU.СЛ34.Н00623

Срок действия с 22.09.2008 по 04.04.2010

0821863

ОРГАН ПО СЕРТИФИКАЦИИ

РОСС RU.0001.11СЛ34 от 26.09.06
ОРГАН ПО СЕРТИФИКАЦИИ ОКОННОЙ И ДВЕРНОЙ ТЕХНИКИ (ОС ОДТ)
Россия, 127238, г. Москва, Локомотивный пр. 21
тел./факс (495) 482-31-98

ПРОДУКЦИЯ

Ставни роллетные из алюминиевых профилей роликовой прокатки
Выпускаются по ТУ 5285-002-96279372-2008
Серийный выпуск
См. приложение

код ОК 005 (ОКП):
52 8538

СООТВЕТСТВУЕТ ТРЕБОВАНИЯМ НОРМАТИВНЫХ ДОКУМЕНТОВ

ТУ 5285-002-96279372-2008, ГОСТ 538-2001

код ТН ВЭД:

ИЗГОТОВИТЕЛЬ ООО «ДОРХАН – роллетные системы», ИНН 5032190466
Россия, 143002, Московская обл., Одинцовский р-н, с. Акулово, промзона, д.6,
27 км. Можайского шоссе, тел. 933-24-00, факс 937-95-50
Адрес производства продукции: тот же

СЕРТИФИКАТ ВЫДАН

ООО «ДОРХАН – роллетные системы»

НА ОСНОВАНИИ

Протокола сертификационных испытаний №12/1 от 27.03.08
ИЦ «Замок», г. Москва, РОСС RU.0001.21СЛ41 от 26.09.06.

ДОПОЛНИТЕЛЬНАЯ ИНФОРМАЦИЯ

Сертификация по схеме 3

М.П.

Руководитель органа _____ подпись Т.В. Власова инициалы, фамилия

Эксперт _____ подпись Л.В. Воронкова инициалы, фамилия

Сертификат не применяется при обязательной сертификации

СИСТЕМА СЕРТИФИКАЦИИ ГОСТ Р
ГОССТАНДАРТ РОССИИ

1687457

ПРИЛОЖЕНИЕ

К сертификату соответствия № РОСС RU.СЛ34.Н00623 от 22.09.2008

Перечень конкретной продукции, на которую распространяется действие сертификата соответствия

код ОК 005 (ОКП) / код ТН ВЭД СНГ	Наименование и обозначение продукции, ее изготовитель	Обозначение документации, по которой выпускается продукция
52 8538	Ставни роллетные из алюминиевых профилей роликовой прокатки - с ручным ленточным приводом; - с ручным шнуровым приводом; - с ручным кордовым приводом; - с ручным воротковым приводом; - с пружинно-инерционным механизмом; - с электроприводом	ТУ 5285-002-96279372-2008

Изготовитель - ООО «ДОРХАН – роллетные системы»

М.П.

Руководитель органа _____ (подпись) Т.В. Власова (инициалы, фамилия)

Эксперт _____ (подпись) Л.В. Воронкова (инициалы, фамилия)

СИСТЕМА СЕРТИФИКАЦИИ ГОСТ Р
ГОССТАНДАРТ РОССИИ

Добровольная сертификация

СЕРТИФИКАТ СООТВЕТСТВИЯ

№ РОСС RU.СЛ34.Н00622

Срок действия с 22.09.2008 **по** 04.04.2010

0821862

ОРГАН ПО СЕРТИФИКАЦИИ
РОСС RU.0001.11СЛ34 от 26.09.06
ОРГАН ПО СЕРТИФИКАЦИИ ОКОННОЙ И ДВЕРНОЙ ТЕХНИКИ (ОС ОДТ)
Россия, 127238, г. Москва, Локомотивный пр. 21
тел./факс (495) 482-31-98

ПРОДУКЦИЯ
Профили металлические роликовой прокатки для роллетных систем
Выпускаются по ТУ 5285-001-96279372-2008
Серийный выпуск
См. приложение

код ОК 005 (ОКП):
52 8538

СООТВЕТСТВУЕТ ТРЕБОВАНИЯМ НОРМАТИВНЫХ ДОКУМЕНТОВ
ТУ 5285-001-96279372-2008, ГОСТ 22233-2001

код ТН ВЭД:
7604 29 900 0

ИЗГОТОВИТЕЛЬ ООО «ДОРХАН – роллетные системы», ИНН 5032190466
Россия, 143002, Московская обл., Одинцовский р-н, с. Акулово, промзона,д. 6,
27 км. Можайского шоссе, тел. 933-24-00, факс 937-95-50
Адрес производства продукции: тот же

СЕРТИФИКАТ ВЫДАН

ООО «ДОРХАН – роллетные системы»

НА ОСНОВАНИИ
Протоколов сертификационных испытаний №12 от 27.03.08
ИЦ «Замок», г. Москва, РОСС RU.0001.21СЛ41 от 26.09.06

ДОПОЛНИТЕЛЬНАЯ ИНФОРМАЦИЯ
Сертификация по схеме 3

М.П.

Руководитель органа _____ подпись — Т.В. Власова (инициалы, фамилия)

Эксперт _____ подпись — Л.В. Воронкова (инициалы, фамилия)

Сертификат не применяется при обязательной сертификации

СИСТЕМА СЕРТИФИКАЦИИ ГОСТ Р
ГОССТАНДАРТ РОССИИ

1687456

ПРИЛОЖЕНИЕ

К сертификату соответствия № РОСС RU.СЛ34.Н00622 от 22.09.2008

Перечень конкретной продукции, на которую распространяется действие сертификата соответствия

код ОК 005 (ОКП) / код ТН ВЭД СНГ	Наименование и обозначение продукции, ее изготовитель	Обозначение документации, по которой выпускается продукция
52 8538 7604 29 900 0	Профили металлические роликовой прокатки для роллетных систем: - из алюминиевых сплавов; - из стальной ленты;	

Изготовитель - ООО «ДОРХАН – роллетные системы»

М.П.

Руководитель органа _____ подпись — Т.В. Власова, инициалы, фамилия

Эксперт _____ подпись — Л.В. Воронкова, инициалы, фамилия

DOORHAN DOCKING SYSTEMS

ROLLING SHUTTER SYSTEMS

DOCKING SYSTEMS

DOORHAN DOCK LEVELLERS

GENERAL INFORMATION ABOUT DOORHAN DOCK LEVELLERS

DoorHan dock levellers are designed to act as bridges between warehouses and trucks' or trailers' bodies and to enable quick and unimpeded movement of forklifts during loading/unloading. They can be used with trucks, which are equipped with tail-lifts.

The company DoorHan produces 3 types of dock levellers:

- **Electrohydraulic dock levellers with hinged lip;**
- **Electrohydraulic dock levellers with telescopic lip;**
- **Mechanical dock levellers.**

Due to the wide range of dock leveller types and models you will be able to find the most optimal solution for your project. DoorHan dock levellers complies with rules and regulations of the European Standard EN 1398.

ELECTROHYDRAULIC DOCK LEVELLERS WITH HINGED LIP OF DLHHI SERIES

DLHHI electrohydraulic dock leveller with hinged lip is the most typical device, that allows to arrange loading site and enables quick loading/unloading. When activated, the deck rises, the lip turns and opens. Then the dock leveller lowers until the lip rests on the truck bed. The system is ready for work. After loading/unloading is completed, the deck rises, the lip turns down and the deck returns to the rest position. Dock leveller can be installed by either embedded or suspended way. Upon customer's request, the dock leveller can be supplied with low temperature oil (-50°C). Dock levellers of DLHHI series complies with rules and regulations of the European Standard EN 1398.

Main Advantages:

- self-cleaning hinges between upper deck and lip;
- lip length 400 mm (optionally can be increased up to 500 mm);
- the lip remains in contact with truck bed even if the truck bed is inclined up to 100mm from horisontal position;
- black/yellow safety marking
- lip supports ensure safe cross movement along the upper deck in closed position;
- hydraulic safety system will stop the upper deck in case of hose rupture or unwanted departure of a truck during operation;
- safety shutters prevent personal feet from jamming in the gap between the upper deck and the pit during operation;
- maintenance support beam ensures safe maintenance and repair of the dock leveller.

DIMENSIONS/FEATURES						
Length, mm	2000	2500	3000	3500	4000	4500
Width, mm		1800	2000	2200		
Working range						
• Above the dock		0-550 mm				
• Below the dock		0-350 mm				
Thickness of upper sheet						
• standard		6/(06-1,8)* mm				
• upon request		8/(0,8-2,4)* mm				
Colour**		Signal blue (RAL 5005)				
Amount of lift cylinders						
• standard		1				
• upon request		2				

∗ Riffling height is indicated in brackets.
∗ Powder coating with preliminary shot blasting.

Sizes of dock levellers by their models are presented on Page 53. The dock levellers of nonstandard sizes, with different operation range and painted in any colour are also available.

PERFOMANCE	
Load capacity	6000 kg (60kN)/10000 kg (10kN)
Maximal point load (upper sheet 6 mm)	1.3 N/mm^2
Maximal point load (upper sheet 8 mm)	6.5 N/mm2
Motor hydraulic unit	0.75 kW
Power supply	380V, 3 phase
Control voltage	24V
Control unit protection class	IP54
Working fluid	Mobil DTE10 EXCEL
Class of surface cleaning before painting	Sa 2
Thickness of painted layer	60-90 micron
Operation temperature range	From -30 to +50°C

WEIGHT OF DOCK LEVELLERS						
Length, mm	2000	2500	3000	3500	4000	4500
Weight, kg	713	891	1029	1167	1361	1465

GENERAL VIEW

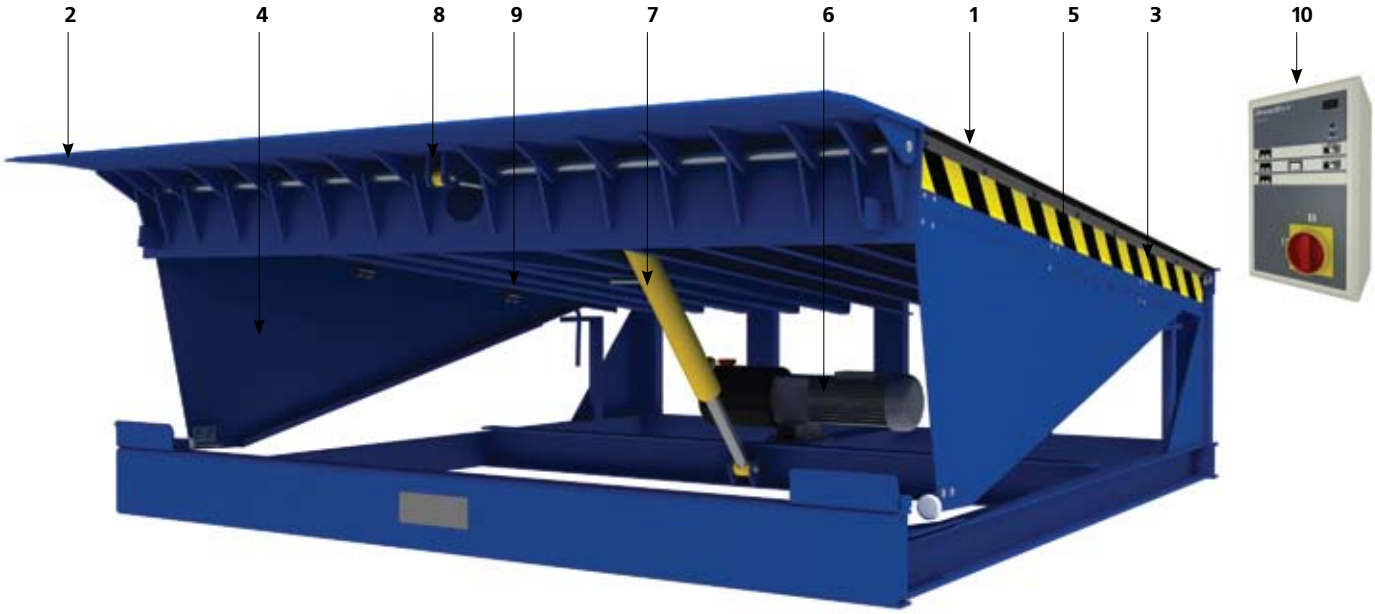

1. **Upper deck**
2. **Lip**
3. **Frame**
4. **Safety shutters**
5. **Signal yellow–black stripping**
6. **Hydraulic pump**
7. **Lift cylinder**
8. **Lip cylinder**
9. **Maintenance support beam**
10. **Control unit**

DESIGN

Upper plate of the dock leveller is a 6-8 mm thick steel sheet with lentiform (diamond) riffling with height 0.5-2.4 mm. If loading/unloading is performed using a standard 4-wheel forklift with inflatable tyres, the dock leveller is manufactured with 6 mm thick sheet and riffling height 0.5-1.5 mm. If loading/unloading is performed using equipment with high point load (for example, electric pilers), the dock leveller is manufactured 8 mm thick steel sheet with riffling height 0.8-2.4 mm. Small deformation of the dock leveller upper sheet is admissible, as it does not effect operation of the product. The lip is made of steel 12 mm thick sheet with diamond riffling height 1.2-3.6 mm. The reinforcement profiles can be made of flanged beams 100/120 mm or L-shaped profile 140x40x4 mm, the frame is made of channel bar 100/120 mm. If the profile length exceeds 3500 mm, the reinforcement profiles and the frame are made of flanged beams 120 mm.

PACKAGE

	Standard	Options
Mounting type	embedded/suspended	Other mounting type requested
Colour	Signal blue (RAL5005)	Any requested
Lip	400 mm, bevel 35 mm	Lip 500 mm/segmented lip/tappered lip
Hydraulic system	1 lift cylinder, 1 control cylinder	2 lift cylinders, low temperature oil -50°C
Bumpers		See Page 213
Seal	PVC-seal along perimeter	For dock levellers > 3000 mm
Heat insulation		Polyurethane foam insulation under upper deck
Load capacity	6000/10000 kg	Other requested
Working range	From -350 to +550 mm	Other requested

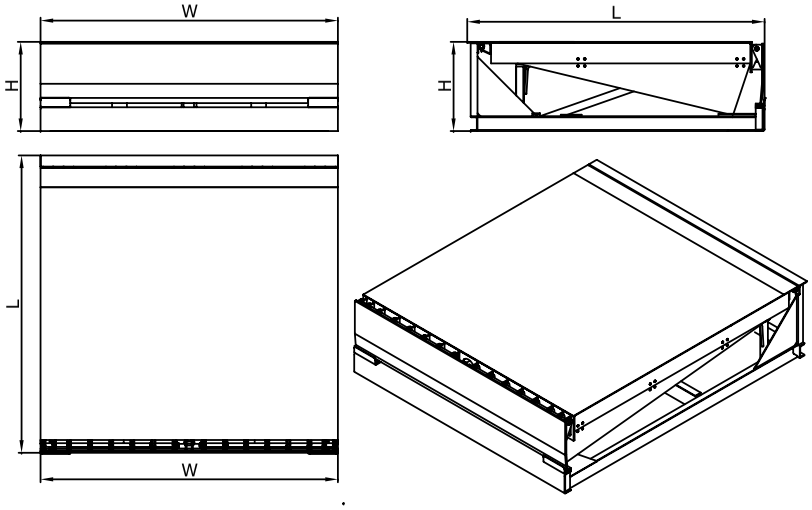

This drawing of electrohydraulic dock leveller with hinged lip of embedded type with width 2000 mm, length 2000 mm, height 600 mm (article DLHHI2020-(06)E)

Dock leveller dimensions

Article of dock leveller 6tn / Article of dock leveller 10tn	Dock leveller size (length x width), mm x mm	L, mm	W, mm	H, mm
DLHHI2018-(06)E / DLHHI2018-(10)E	2000x1800	2000	1800	600
DLHHI2518-(06)E / DLHHI2518-(10)E	2500x1800	2500	1800	600
DLHHI3018-(06)E / DLHHI3018-(10)E	3000x1800	3000	1800	600
DLHHI3518-(06)E / DLHHI3518-(10)E	3500x1800	3500	1800	700
DLHHI4018-(06)E / DLHHI4018-(10)E	4000x1800	4000	1800	700
DLHHI4518-(06)E / DLHHI4518-(10)E	4500x1800	4500	1800	700
DLHHI2020-(06)E / DLHHI2020-(10)E	2000x2000	2000	2000	600
DLHHI2520-(06)E / DLHHI2520-(10)E	2500x2000	2500	2000	600
DLHHI3020-(06)E / DLHHI3020-(10)E	3000x2000	3000	2000	600
DLHHI3520-(06)E / DLHHI3520-(10)E	3500x2000	3500	2000	600
DLHHI4020-(06)E / DLHHI4020-(10)E	4000x2000	4000	2000	700
DLHHI4520-(06)E / DLHHI4520-(10)E	4500x2000	4500	2000	700
DLHHI2022-(06)E / DLHHI2022-(10)E	2000x2200	2000	2000	600
DLHHI2522-(06)E / DLHHI2522-(10)E	2500x2200	2500	2200	600
DLHHI3022-(06)E / DLHHI3022-(10)E	3000x2200	3000	2200	600
DLHHI3522-(06)E / DLHHI3522-(10)E	3500x2200	3500	2200	600
DLHHI4022-(06)E / DLHHI4022-(10)E	4000x2200	4000	2200	700
DLHHI4522-(06)E / DLHHI4522-(10)E	4500x2200	4500	2200	700

For more detailed information, please contact DoorHan company.

DLHHIE Model dock leveller

Electrohydraulic dock leveller with hinged lip of embedded type

1:1

DoorHan-Docking systems

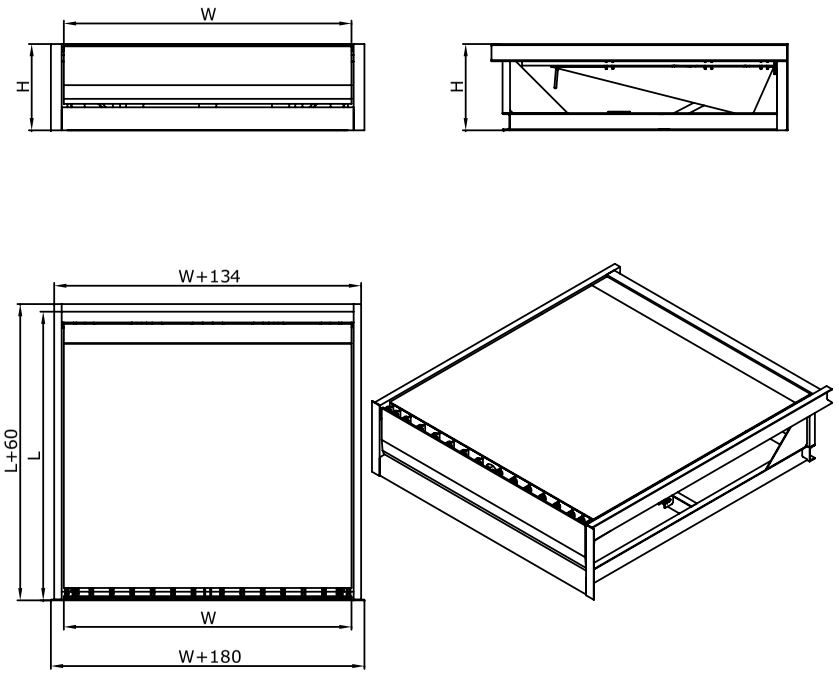

Dock leveller dimensions

Article of dock leveller 6tn / Article of dock leveller 10tn	Dock leveller size (length x width), mm x mm	L , mm	W , mm	H , mm
DLHHI2018-(06)S / DLHHI2018-(10)S	2000x1800	2000	1800	600
DLHHI2518-(06)S / DLHHI2518-(10)S	2500x1800	2500	1800	600
DLHHI3018-(06)S / DLHHI3018-(10)S	3000x1800	3000	1800	600
DLHHI3518-(06)S / DLHHI3518-(10)S	3500x1800	3500	1800	600
DLHHI4018-(06)S / DLHHI4018-(10)S	4000x1800	4000	1800	700
DLHHI4518-(06)S / DLHHI4518-(10)S	4500x1800	4500	1800	700
DLHHI2020-(06)S / DLHHI2020-(10)S	2000x2000	2000	2000	600
DLHHI2520-(06)S / DLHHI2520-(10)S	2500x2000	2500	2000	600
DLHHI3020-(06)S / DLHHI3020-(10)S	3000x2000	3000	2000	600
DLHHI3520-(06)S / DLHHI3520-(10)S	3500x2000	3500	2000	600
DLHHI4020-(06)S / DLHHI4020-(10)S	4000x2000	4000	2000	700
DLHHI4520-(06)S / DLHHI4520-(10)S	4500x2000	4500	2000	700
DLHHI2022-(06)S / DLHHI2022-(10)S	2000x1800	2000	2200	600
DLHHI2522-(06)S / DLHHI2522-(10)S	2500x2200	2500	2200	600
DLHHI3022-(06)S / DLHHI3022-(10)S	3000x2200	3000	2200	600
DLHHI3522-(06)S / DLHHI3522-(10)S	3500x2200	3500	2200	600
DLHHI4022-(06)S / DLHHI4022-(10)S	4000x2200	4000	2200	700
DLHHI4522-(06)S / DLHHI4522-(10)S	4500x2200	4500	2200	700

For more detailed information, please contact DoorHan company.

This drawing of electrohydraulic dock leveller with hinged lip of suspended type with width 2000 mm, length 2000 mm, height 600 mm (article DLHHI2020-(06)S).

DLHHIS Model dock leveller

Electrohydraulic dock leveller with hinged lip of suspended type

1:1

DoorHan-Docking systems

Pit dimensions

Article of dock leveller 6tn / Article of dock leveller 10tn	Dock leveller size (length x width), mm x mm	L, mm	W, mm	H, mm
DLHHI2018-(06)E / DLHHI2018-(10)E	2000x1800	2020	1830	600
DLHHI2518-(06)E / DLHHI2518-(10)E	2500x1800	2520	1830	600
DLHHI3018-(06)E / DLHHI3018-(10)E	3000x1800	3020	1830	600
DLHHI3518-(06)E / DLHHI3518-(10)E	3500x1800	3520	1830	600
DLHHI4018-(06)E / DLHHI4018-(10)E	4000x1800	4020	1830	700
DLHHI4518-(06)E / DLHHI4518-(10)E	4500x1800	4520	1830	700
DLHHI2020-(06)E / DLHHI2020-(10)E	2000x2000	2020	2030	600
DLHHI2520-(06)E / DLHHI2520-(10)E	2500x2000	2520	2030	600
DLHHI3020-(06)E / DLHHI3020-(10)E	3000x2000	3020	2030	600
DLHHI3520-(06)E / DLHHI3520-(10)E	3500x2000	3520	2030	600
DLHHI4020-(06)E / DLHHI4020-(10)E	4000x2000	4020	2030	700
DLHHI4520-(06)E / DLHHI4520-(10)E	4500x2000	4520	2030	700
DLHHI2022-(06)E / DLHHI2022-(10)E	2000x2200	2020	2230	600
DLHHI2522-(06)E / DLHHI2522-(10)E	2500x2200	2520	2230	600
DLHHI3022-(06)E / DLHHI3022-(10)E	3000x2200	3020	2230	600
DLHHI3522-(06)E / DLHHI3522-(10)E	3500x2200	3520	2230	600
DLHHI4022-(06)E / DLHHI4022-(10)E	4000x2200	4020	2230	700
DLHHI4522-(06)E / DLHHI4522-(10)E	4500x2200	4520	2230	700

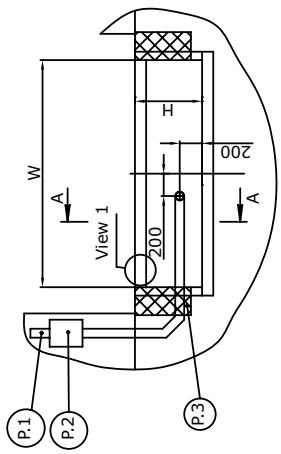

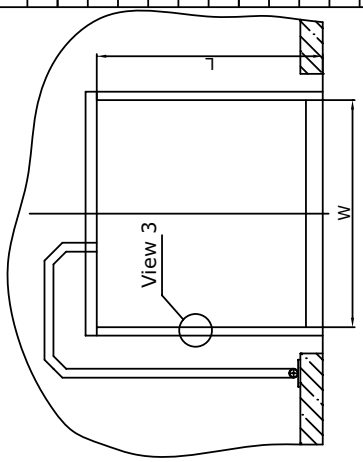

This drawing illustrates pit preparation for dock leveller with hinged lip of embedded type with width 2000 mm, length 2000 mm and height 600 mm(article DLHHI2020-(06)E) intended for use with trucks without tail lift.

1. 380V (3 phase + neutral + earth) lead to dock leveller control unit installation place.
2. Area 200x300 mm shall be available for installation of dock leveller control unit.
3. Area for installation of rubber bumpers shall be available. (See Section "Optional Equipment")

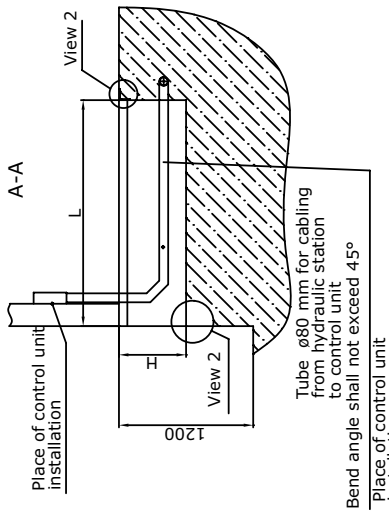

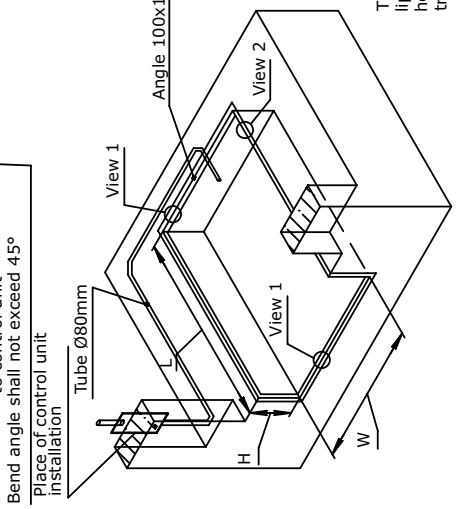

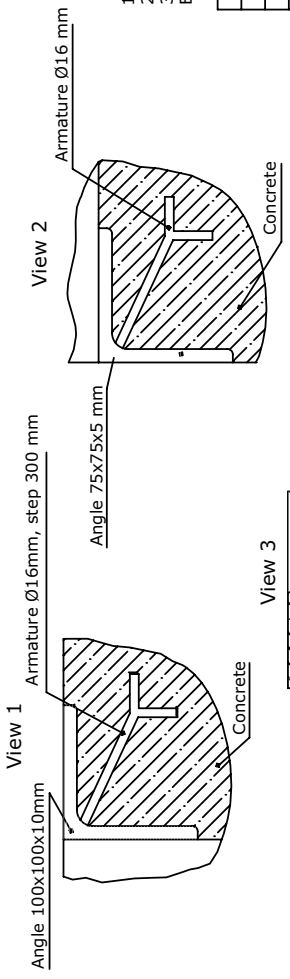

DLHHIE Model dock leveller

Pit preparation for dock leveller with hinged lip of embedded type intended for use with trucks without tail lift

1:1

DoorHan-Docking systems

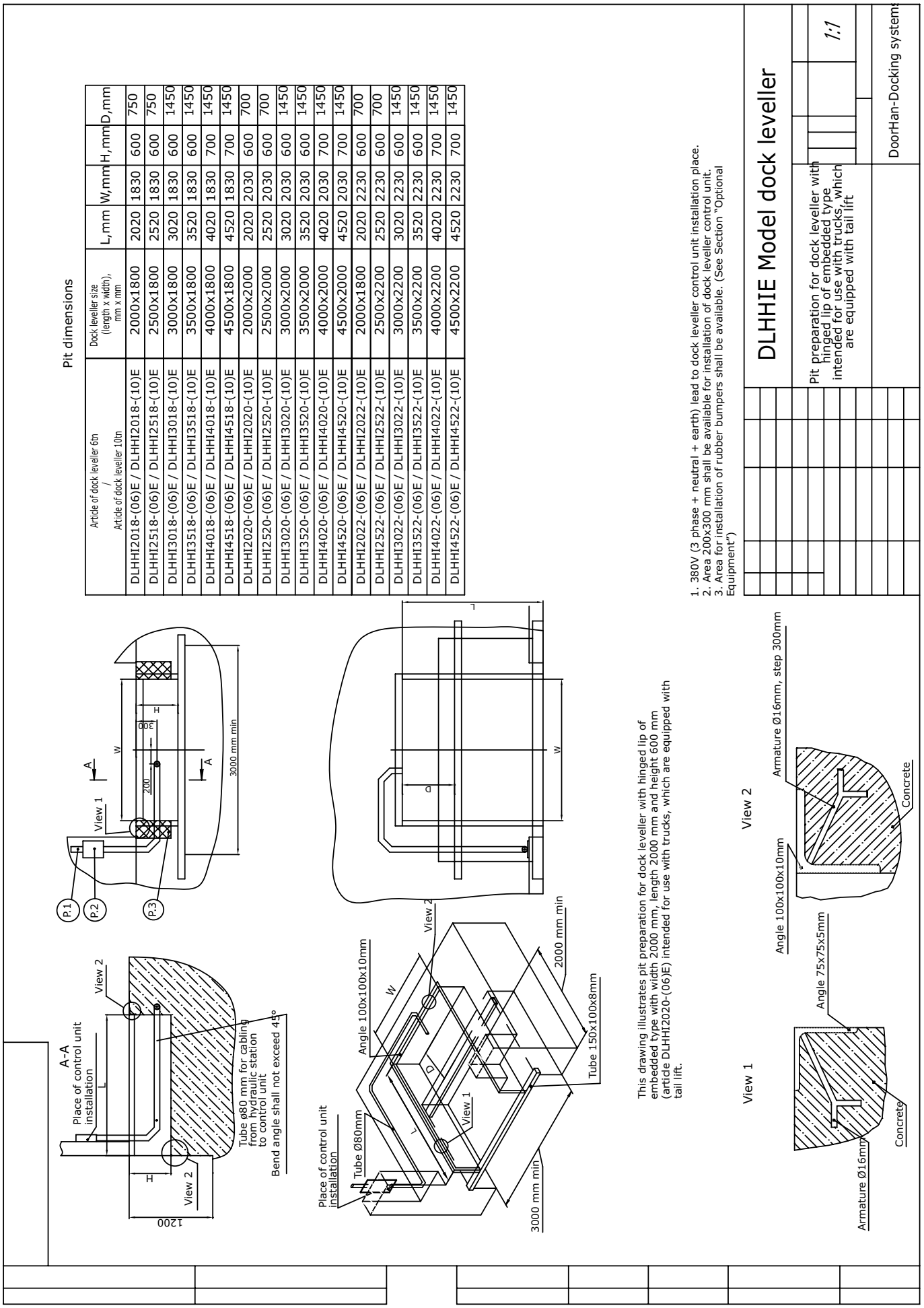

This drawing illustrates pit preparation for dock leveller with hinged lip of embedded type with width 2000 mm, length 2000 mm and height 600 mm (article DLHHI2020-(06)E) intended for use with trucks, which are equipped with tail lift.

Pit dimensions

Article of dock leveller 6tn / Article of dock leveller 10tn	Dock leveller size (length x width), mm x mm	L,mm	W,mm	H,mm	D,mm
DLHHI2018-(06)E / DLHHI2018-(10)E	2000x1800	2020	1830	600	750
DLHHI2518-(06)E / DLHHI2518-(10)E	2500x1800	2520	1830	600	750
DLHHI3018-(06)E / DLHHI3018-(10)E	3000x1800	3020	1830	600	1450
DLHHI3518-(06)E / DLHHI3518-(10)E	3500x1800	3520	1830	600	1450
DLHHI4018-(06)E / DLHHI4018-(10)E	4000x1800	4020	1830	700	1450
DLHHI4518-(06)E / DLHHI4518-(10)E	4500x1800	4520	1830	700	1450
DLHHI2020-(06)E / DLHHI2020-(10)E	2000x2000	2020	2030	600	700
DLHHI2520-(06)E / DLHHI2520-(10)E	2500x2000	2520	2030	600	700
DLHHI3020-(06)E / DLHHI3020-(10)E	3000x2000	3020	2030	600	1450
DLHHI3520-(06)E / DLHHI3520-(10)E	3500x2000	3520	2030	600	1450
DLHHI4020-(06)E / DLHHI4020-(10)E	4000x2000	4020	2030	700	1450
DLHHI4520-(06)E / DLHHI4520-(10)E	4500x2000	4520	2030	700	1450
DLHHI2022-(06)E / DLHHI2022-(10)E	2000x1800	2020	2230	600	700
DLHHI2522-(06)E / DLHHI2522-(10)E	2500x2200	2520	2230	600	700
DLHHI3022-(06)E / DLHHI3022-(10)E	3000x2200	3020	2230	600	1450
DLHHI3522-(06)E / DLHHI3522-(10)E	3500x2200	3520	2230	600	1450
DLHHI4022-(06)E / DLHHI4022-(10)E	4000x2200	4020	2230	700	1450
DLHHI4522-(06)E / DLHHI4522-(10)E	4500x2200	4520	2230	700	1450

Pit dimensions

Article of dock leveller 6tn / Article of dock leveller 10tn	Dock leveller size (length x width), mm x mm	L,mm	W,mm	H,mm
DLHHI2018-(06)S / DLHHI2018-(10)S	2000x1800	2000	1860	600
DLHHI2518-(06)S / DLHHI2518-(10)S	2500x1800	2500	1860	600
DLHHI3018-(06)S / DLHHI3018-(10)S	3000x1800	3000	1860	600
DLHHI3518-(06)S / DLHHI3518-(10)S	3500x1800	3500	1860	600
DLHHI4018-(06)S / DLHHI4018-(10)S	4000x1800	4000	1860	700
DLHHI4518-(06)S / DLHHI4518-(10)S	4500x1800	4500	1860	700
DLHHI2020-(06)S / DLHHI2020-(10)S	2000x2000	2000	2060	600
DLHHI2520-(06)S / DLHHI2520-(10)S	2500x2000	2500	2060	600
DLHHI3020-(06)S / DLHHI3020-(10)S	3000x2000	3000	2060	600
DLHHI3520-(06)S / DLHHI3520-(10)S	3500x2000	3500	2060	600
DLHHI4020-(06)S / DLHHI4020-(10)S	4000x2000	4000	2060	700
DLHHI4520-(06)S / DLHHI4520-(10)S	4500x2000	4500	2060	700
DLHHI2022-(06)S / DLHHI2022-(10)S	2000x1800	2000	2260	600
DLHHI2522-(06)S / DLHHI2522-(10)S	2500x2200	2500	2260	600
DLHHI3022-(06)S / DLHHI3022-(10)S	3000x2200	3000	2260	600
DLHHI3522-(06)S / DLHHI3522-(10)S	3500x2200	3500	2260	600
DLHHI4022-(06)S / DLHHI4022-(10)S	4000x2200	4000	2260	700
DLHHI4522-(06)S / DLHHI4522-(10)S	4500x2200	4500	2260	700

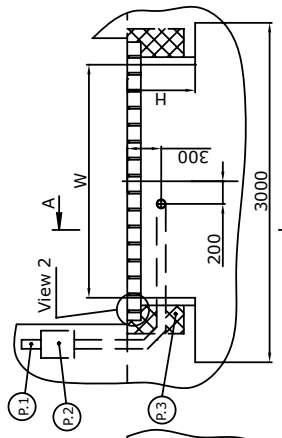

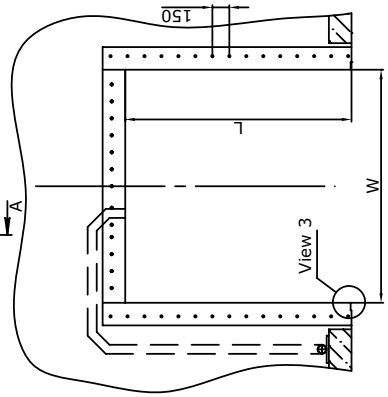

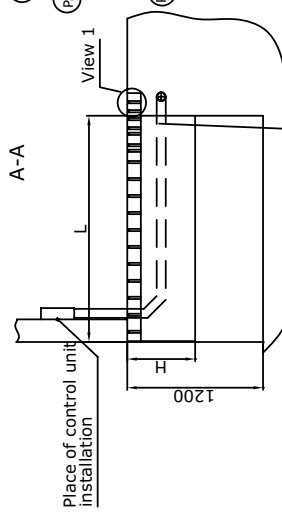

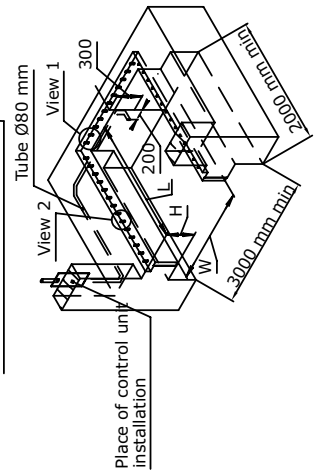

This drawing illustrates pit preparation for dock leveller with hinged lip of suspended type with width 2000 mm, length 2000 mm and height 600 mm (article DLHHIS2020-(06)S)

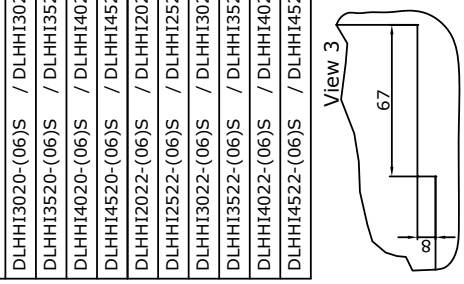

1. 380V (3 phase + neutral + earth) lead to dock leveller control unit installation place.
2. Area 200x300 mm shall be available for installation of dock leveller control unit.
3. Area for installation of rubber bumpers shall be available. (See Section "Optional Equipment")

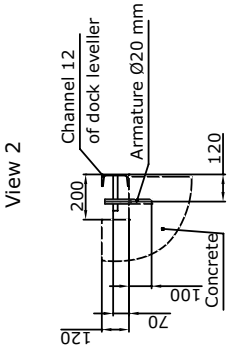

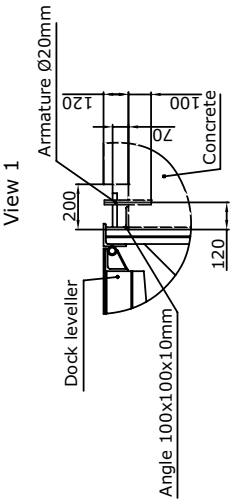

DLHHIS Model dock leveller

Pit preparation for dock leveller with hinged lip of suspended type

1:1

DoorHan-Docking systems

ELECTROHYDRAULIC DOCK LEVELLER WITH TELESCOPIC LIP OF DSI SERIES

DSI electrohydraulic dock leveller with telescopic lip is the most efficient device, which enables access of a forklift from the warehouse to the truck bed when loading/unloading. It is used, when there is a need in exact positioning of the lip on the truck bed, for instance, if the truck is not correctly parked, or if side loading is to be performed. Lip segments allow to load/unload the trucks, which width is less than width of the dock leveller.

After activation the deck rises and the lip slides ahead, then the deck lowers until the lip rests on the truck bed. After loading/unloading is completed, the deck rises, the lip slides in and the dock leveller returns to its rest position.

Dock leveller can be installed by either embedded or suspended way. Upon customer's request, the dock leveller can be supplied with low temperature oil (-50°C). Dock levellers of DSI series complies with rules and regulations of the European Standard EN 1398.

Main Advantages:

- lip length 500 or 1000mm;
- the lip remains in contact with truck bed even if the truck bed is inclined up up to 100mm from horisontal position;
- black/yellow safety marking;
- lip supports ensure safe cross movement along the upper deck in closed position;
- hydraulic safety system will stop the deck in the event of hose rupture or unwanted departure of a truck during operation;
- safety shutters prevent personal feet from jamming in the gap between the upper deck and the pit during operation;

DIMENSIONS/ FEATURES				
Length, mm	2500	3000	3500	4000
Width, mm	2000	2200		
Working range				
Above the dock, mm	0-480			
Below the dock, mm	0-430			
Thickness of upper sheet, mm	8/(0,8-2,4)*			
Colour**	Signal blue (RAL 5005)			
Amount of lift cylinders	2			

*** Riffling height is indicated in brackets.**
*** Powder coating with preliminary shot blasting.**

Sizes of dock levellers by to their models are presented on Page 67. The dock levellers of nonstandard sizes, with different working range and painted in any colour are also available.

PERFOMANCE	
Load capacity	**6000 kg (60kN)/10000 kg (10kN)**
Maximal point load (upper sheet 6 mm)	1.3 N/mm2
Maximal point load (upper sheet 8 mm)	6.5 N/mm2
Motor hydraulic unit	1.1 kW
Power supply	380V, 3 phase
Control voltage	24V
Control unit protection class	IP54
Working fluid	Mobil DTE10 EXCEL
Class of surface cleaning before painting	Sa 2
Thickness of painted layer	60-90 micron
Operation temperature range	From -30 to +50°C

GENERAL VIEW

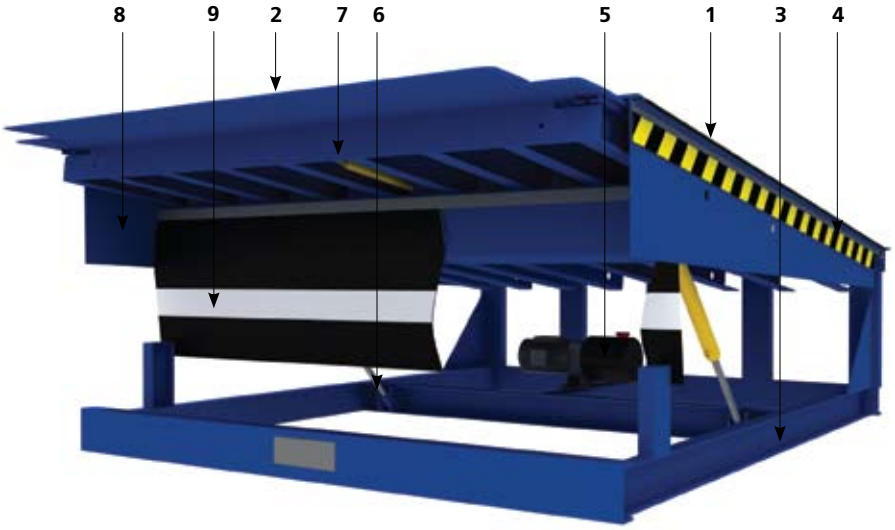

1. **Upper deck**
2. **Lip**
3. **Frame**
4. **Signal yellow–black stripping**
5. **Hydraulic pump**
6. **Lift cylinder**
7. **Lip cylinder**
8. **Maintenance lock**
9. **Front PVC curtain**
10. **Control unit**

DESIGN

Upper plate of the dock leveller is a steel 8-10 mm thick sheet with 0.8-3 mm high riffling. If loading/unloading is performed using a standard 4-wheel forklift with inflatable tyres, the dock leveller is manufactured with 8 mm thick sheet and riffling height 0.8-2.4 mm. If load capacity is 10000 kg, the dock leveller is manufactured 10 mm thick steel sheet with riffling height 1-3 mm. Small deformation of the dock leveller upper sheet is admissible, as it does not effect operation of the product. The lip is made of steel 12 mm thick sheet with diamond Riffling height 1.2-3.6 mm. The reinforcement profiles can be made of flanged beams 100/120 mm or L-shaped profile 187x70x4 mm, the frame is made of channel bar or flanged beam 100-120 mm.

PACKAGE		
	Standard	**Options**
Mounting type	embedded/suspended	Other mounting type requested
Colour	Signal blue (RAL5005)	Any requested
Lip	500/1000 mm, bevel 35 mm	Segmented/tappered lip
Hydraulic system	2 lift cylinders, 1 lip control cylinder	oil for operation at low temperatures -50°C
Seal	PVC-seal along the perimeter	For dock levellers > 3000 mm
Load capacity	6000/10000 kg	Other requested
Working range	From -520 to +560 mm	Other requested

WEIGHT OF DOCK LEVELLERS					
Length, mm	2000	2500	3000	3500	4000
Weight, kg	870	1087	1178	1273	1421

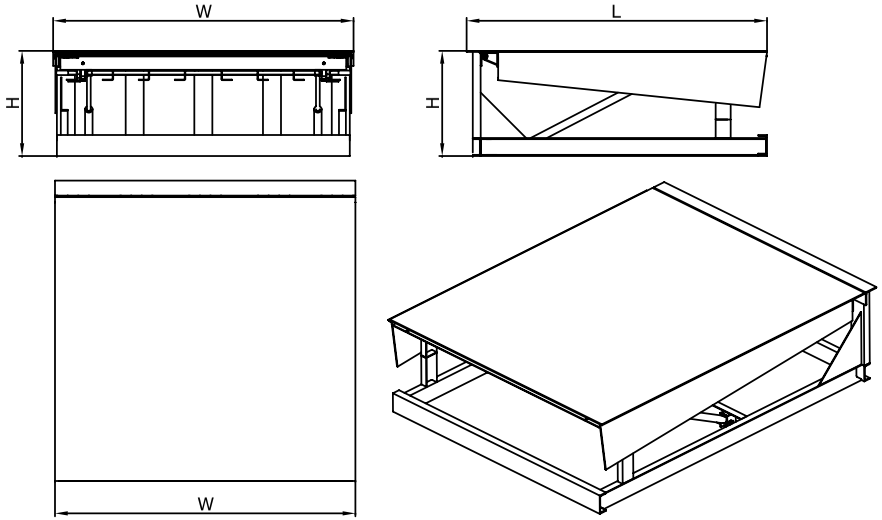

This drawing of electrohydraulic dock leveller with sliding lip 500 mm of embedded type with width 2000 mm, length 2000 mm, height 700 mm

Dock leveller 6tn dimensions

Article of dock leveller lip 500mm / Article of dock leveller lip 1000mm	Dock leveller size (length x width), mm x mm	L, mm	W, mm	H, mm
DSI202005-(06)E / -	2000x2000	2000	2000	700
DSI202205-(06)E / -	2000x2200	2000	2200	700
DSI202405-(06)E / -	2000x2400	2000	2400	700
DSI252005-(06)E / DSI252010-(06)E	2500x2000	2500	2000	700
DSI252205-(06)E / DSI252210-(06)E	2500x2200	2500	2200	700
DSI252405-(06)E / DSI252410-(06)E	2500x2400	2500	2400	700
DSI302005-(06)E / DSI302010-(06)E	3000x2000	3000	2000	800
DSI302205-(06)E / DSI302210-(06)E	3000x2200	3000	2200	800
DSI302405-(06)E / DSI302410-(06)E	3000x2400	3000	2400	800
DSI352005-(06)E / DSI352010-(06)E	3500x2000	3500	2000	800
DSI352205-(06)E / DSI352210-(06)E	3500x2200	3500	2200	800
DSI352405-(06)E / DSI352410-(06)E	3500x2400	3500	2400	800
DSI402005-(06)E / DSI402010-(06)E	4000x2000	4000	2000	800
DSI402205-(06)E / DSI402210-(06)E	4000x2200	4000	2200	800
DSI402405-(06)E / DSI402410-(06)E	4000x2400	4000	2400	800

Dock leveller 10tn dimensions

Article of dock leveller lip 500mm / Article of dock leveller lip 1000mm	Dock leveller size (length x width), mm x mm	L, mm	W, mm	H, mm
DSI202005-(10)E / -	2000x2000	2000	2000	700
DSI202205-(10)E / -	2000x2200	2000	2200	700
DSI202405-(10)E / -	2000x2400	2000	2400	700
DSI252005-(10)E / DSI252010-(10)E	2500x2000	2500	2000	700
DSI252205-(10)E / DSI252210-(10)E	2500x2200	2500	2200	700
DSI252405-(10)E / DSI252410-(10)E	2500x2400	2500	2400	700
DSI302005-(10)E / DSI302010-(10)E	3000x2000	3000	2000	800
DSI302205-(10)E / DSI302210-(10)E	3000x2200	3000	2200	800
DSI302405-(10)E / DSI302410-(10)E	3000x2400	3000	2400	800
DSI352005-(10)E / DSI352010-(10)E	3500x2000	3500	2000	800
DSI352205-(10)E / DSI352210-(10)E	3500x2200	3500	2200	800
DSI352405-(10)E / DSI352410-(10)E	3500x2400	3500	2400	800
DSI402005-(10)E / DSI402010-(10)E	4000x2000	4000	2000	800
DSI402205-(10)E / DSI402210-(10)E	4000x2200	4000	2200	800
DSI402405-(10)E / DSI402410-(10)E	4000x2400	4000	2400	800

For more detailed information, please contact DoorHan company.

DSIE Model dock leveller

Electrohydraulic dock leveller with sliding lip of embedded type

1:1

DoorHan-Docking systems

ELECTROHYDRAULIC DOCK LEVELLER WITH TELESCOPIC LIP OF EMBEDDED TYPE

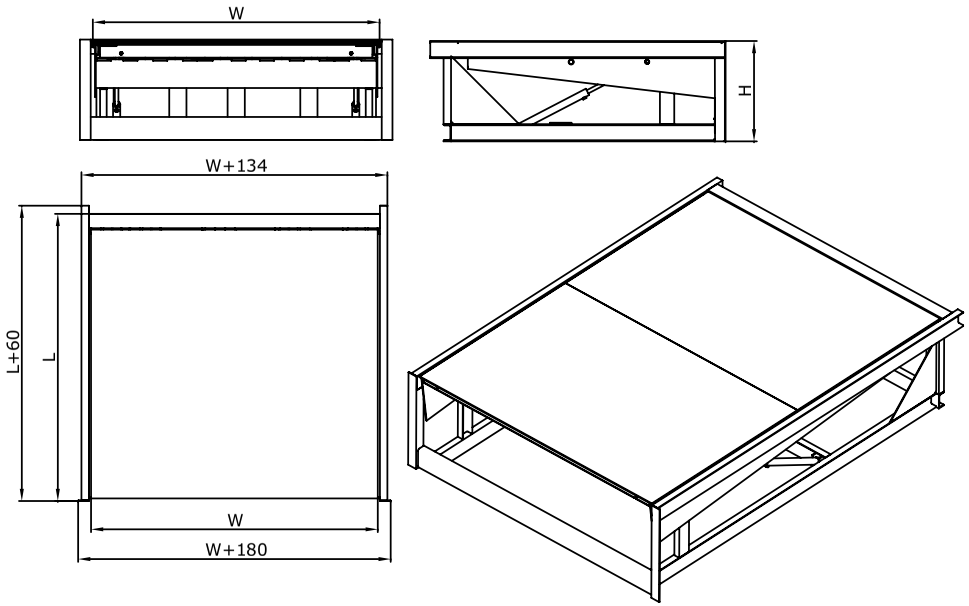

This drawing of electrohydraulic dock leveller with sliding lip 500 mm of suspended type with width 2000 mm, length 2000 mm, height 700 mm

Dock leveller 6tn dimensions

Article of dock leveller lip 500mm / Article of dock leveller lip 1000mm	Dock leveller size (length x width), mm x mm	L, mm	W, mm	H, mm
DSI202005-(06)S / -	2000x2000	2000	2000	700
DSI202205-(06)S / -	2000x2200	2000	2200	700
DSI202405-(06)S / -	2000x2400	2000	2400	700
DSI252005-(06)S / DSI252010-(06)S	2500x2000	2500	2000	700
DSI252205-(06)S / DSI252210-(06)S	2500x2200	2500	2200	700
DSI252405-(06)S / DSI252410-(06)S	2500x2400	2500	2400	700
DSI302005-(06)S / DSI302010-(06)S	3000x2000	3000	2000	800
DSI302205-(06)S / DSI302210-(06)S	3000x2200	3000	2200	800
DSI302405-(06)S / DSI302410-(06)S	3000x2400	3000	2400	800
DSI352005-(06)S / DSI352010-(06)S	3500x2000	3500	2000	800
DSI352205-(06)S / DSI352210-(06)S	3500x2200	3500	2200	800
DSI352405-(06)S / DSI352410-(06)S	3500x2400	3500	2400	800
DSI402005-(06)S / DSI402010-(06)S	4000x2000	4000	2000	800
DSI402205-(06)S / DSI402210-(06)S	4000x2200	4000	2200	800
DSI402405-(06)S / DSI402410-(06)S	4000x2400	4000	2400	800

Dock leveller 10tn dimensions

Article of dock leveller lip 500mm / Article of dock leveller lip 1000mm	Dock leveller size (length x width), mm x mm	L, mm	W, mm	H, mm
DSI202005-(10)S / -	2000x2000	2000	2000	700
DSI202205-(10)S / -	2000x2200	2000	2200	700
DSI202405-(10)S / -	2000x2400	2000	2400	700
DSI252005-(10)S / DSI252010-(10)S	2500x2000	2500	2000	700
DSI252205-(10)S / DSI252210-(10)S	2500x2200	2500	2200	700
DSI252405-(10)S / DSI252410-(10)S	2500x2400	2500	2400	700
DSI302005-(10)S / DSI302010-(10)S	3000x2000	3000	2000	800
DSI302205-(10)S / DSI302210-(10)S	3000x2200	3000	2200	800
DSI302405-(10)S / DSI302410-(10)S	3000x2400	3000	2400	800
DSI352005-(10)S / DSI352010-(10)S	3500x2000	3500	2000	800
DSI352205-(10)S / DSI352210-(10)S	3500x2200	3500	2200	800
DSI352405-(10)S / DSI352410-(10)S	3500x2400	3500	2400	800
DSI402005-(10)S / DSI402010-(10)S	4000x2000	4000	2000	800
DSI402205-(10)S / DSI402210-(10)S	4000x2200	4000	2200	800
DSI402405-(10)S / DSI402410-(10)S	4000x2400	4000	2400	800

For more detailed information, please contact DoorHan company.

DSIS Model dock leveller

Electrohydraulic dock leveller with sliding lip of suspended type

1:1

DoorHan-Docking systems

ELECTROHYDRAULIC DOCK LEVELLER WITH TELESCOPIC LIP OF SUSPENDED TYPE

DRAWING OF PIT PREPARATION AND EMBEDDED FITTINGS INSTALLATION FOR DOCK LEVELLER WITH TELESCOPIC LIP OF EMBEDDED TYPE INTENDED FOR USE WITH TRUCKS WITHOUT TAIL LIFT

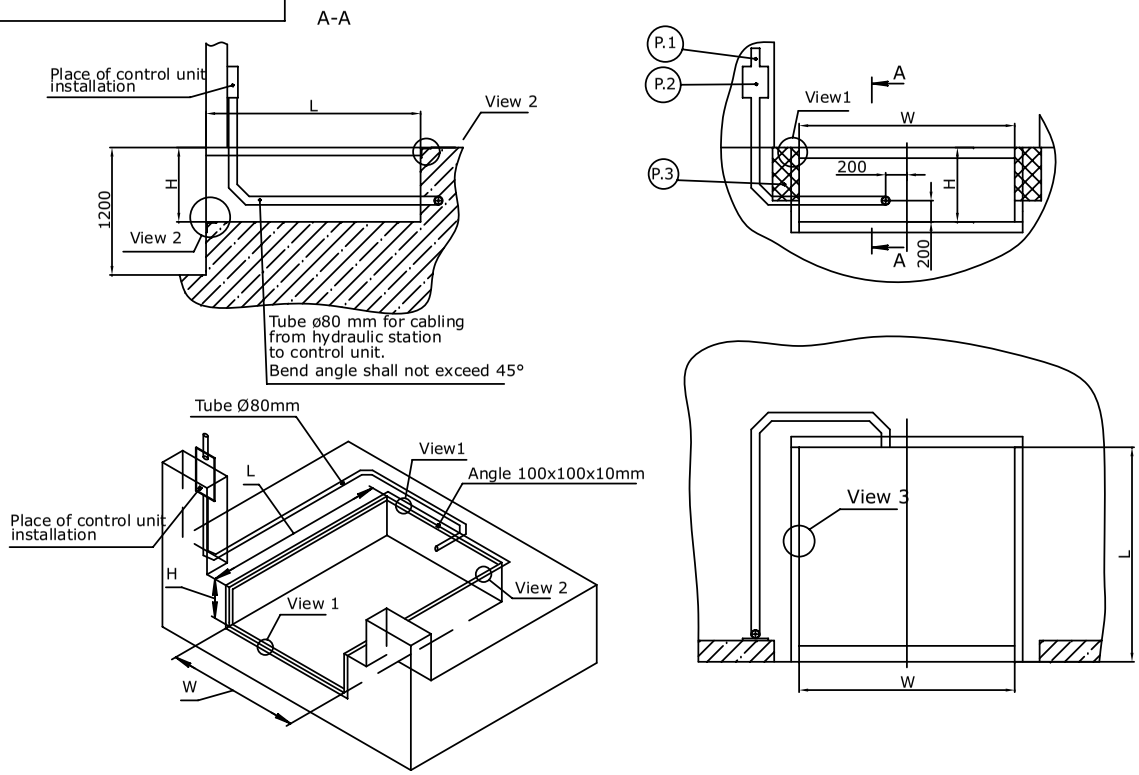

This drawing illustrates pit preparation for dock leveller with sliding lip 500mm of embedded type with width 2000 mm, length 2000 mm and height 700 mm (article DSI202005S) intended for use with trucks without tail lift.

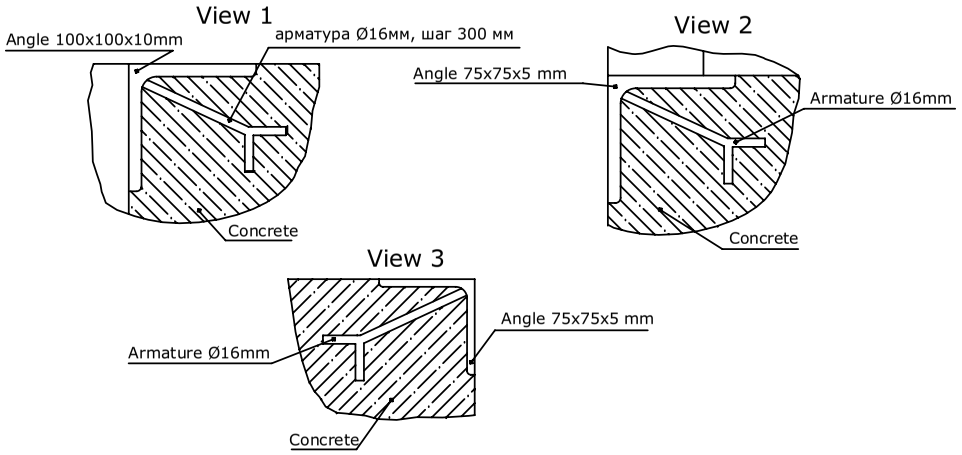

Pit dimensions for dock leveller 6tn

Article of dock leveller lip 500mm / Article of dock leveller lip 1000mm	Dock leveller size (length x width), mm x mm	L, mm	W, mm	H, mm
DSI202005-(06)E/ -	2000x2000	2020	2030	700
DSI202205-(06)E/ -	2000x2200	2020	2230	700
DSI202405-(06)E/ -	2000x2400	2020	2430	700
DSI252005-(06)E/ DSI252010-(06)E	2500x2000	2520	2030	700
DSI252205-(06)E/ DSI252210-(06)E	2500x2200	2520	2230	700
DSI252405-(06)E/ DSI252410-(06)E	2500x2400	2520	2430	700
DSI302005-(06)E/ DSI302010-(06)E	3000x2000	3020	2030	800
DSI302205-(06)E/ DSI302210-(06)E	3000x2200	3020	2230	800
DSI302405-(06)E/ DSI302410-(06)E	3000x2400	3020	2430	800
DSI352005-(06)E/ DSI352010-(06)E	3500x2000	3520	2030	800
DSI352205-(06)E/ DSI352210-(06)E	3500x2200	3520	2230	800
DSI352405-(06)E/ DSI352410-(06)E	3500x2400	3520	2430	800
DSI402005-(06)E/ DSI402010-(06)E	4000x2000	4020	2030	800
DSI402205-(06)E/ DSI402210-(06)E	4000x2200	4020	2230	800
DSI402405-(06)E/ DSI402410-(06)E	4000x2400	4020	2430	800

Pit dimensions for dock leveller 10tn

Article of dock leveller lip 500mm / Article of dock leveller lip 1000mm	Dock leveller size (length x width), mm x mm	L, mm	W, mm	H, mm
DSI202005-(10)E/ -	2000x2000	2020	2030	700
DSI202205-(10)E/ -	2000x2200	2020	2230	700
DSI202405-(10)E/ -	2000x2400	2020	2430	700
DSI252005-(10)E/ DSI252010-(10)E	2500x2000	2520	2030	700
DSI252205-(10)E/ DSI252210-(10)E	2500x2200	2520	2230	700
DSI252405-(10)E/ DSI252410-(10)E	2500x2400	2520	2430	700
DSI302005-(10)E/ DSI302010-(10)E	3000x2000	3020	2030	800
DSI302205-(10)E/ DSI302210-(10)E	3000x2200	3020	2230	800
DSI302405-(10)E/ DSI302410-(10)E	3000x2400	3020	2430	800
DSI352005-(10)E/ DSI352010-(10)E	3500x2000	3520	2030	800
DSI352205-(10)E/ DSI352210-(10)E	3500x2200	3520	2230	800
DSI352405-(10)E/ DSI352410-(10)E	3500x2400	3520	2430	800
DSI402005-(10)E/ DSI402010-(10)E	4000x2000	4020	2030	800
DSI402205-(10)E/ DSI402210-(10)E	4000x2200	4020	2230	800
DSI402405-(10)E/ DSI402410-(10)E	4000x2400	4020	2430	800

1. 380V (3 phase + neutral + earth) lead to dock leveller control unit installation place.
2. Area 200x300 mm shall be available for installation of dock leveller control unit.
3. Area for installation of rubber bumpers shall be available. (See Section "Optional Equipment")

DSIE Model dock leveller

Pit preparation for dock leveller with sliding lip of embedded type intended for use with trucks without tail lift

1:

DoorHan-Docking syst

Pit dimensions for dock leveller 6tn

Article of dock leveller lip 500mm / Article of dock leveller lip 1000mm	Dock leveller size (length x width), mm x mm	L, mm	W, mm	H, mm	D, mm
DSI202005-(06)E / -	2000x2000	2020	2030	700	375
DSI202205-(06)E / -	2000x2200	2020	2230	700	375
DSI202405-(06)E / -	2000x2400	2020	2430	700	375
DSI252005-(06)E / DSI252010-(06)E	2500x2000	2520	2030	700	875
DSI252205-(06)E / DSI252210-(06)E	2500x2200	2520	2230	700	875
DSI252405-(06)E / DSI252410-(06)E	2500x2400	2520	2430	700	875
DSI302005-(06)E / DSI302010-(06)E	3000x2000	3020	2030	800	1425
DSI302205-(06)E / DSI302210-(06)E	3000x2200	3020	2230	800	1425
DSI302405-(06)E / DSI302410-(06)E	3000x2400	3020	2430	800	1425
DSI352005-(06)E / DSI352010-(06)E	3500x2000	3520	2030	800	1425
DSI352205-(06)E / DSI352210-(06)E	3500x2200	3520	2230	800	1425
DSI352405-(06)E / DSI352410-(06)E	3500x2400	3520	2430	800	1425
DSI402005-(06)E / DSI402010-(06)E	4000x2000	4020	2030	800	1425
DSI402205-(06)E / DSI402210-(06)E	4000x2200	4020	2230	800	1425
DSI402405-(06)E / DSI402410-(06)E	4000x2400	4020	2430	800	1425

Pit dimensions for dock leveller 10tn

Article of dock leveller lip 500mm / Article of dock leveller lip 1000mm	Dock leveller size (length x width), mm x mm	L, mm	W, mm	H, mm	D, mm
DSI202005-(10)E / -	2000x2000	2020	2030	700	375
DSI202205-(10)E / -	2000x2200	2020	2230	700	375
DSI202405-(10)E / -	2000x2400	2020	2430	700	375
DSI252005-(10)E / DSI252010-(10)E	2500x2000	2520	2030	700	875
DSI252205-(10)E / DSI252210-(10)E	2500x2200	2520	2230	700	875
DSI252405-(10)E / DSI252410-(10)E	2500x2400	2520	2430	700	875
DSI302005-(10)E / DSI302010-(10)E	3000x2000	3020	2030	800	1425
DSI302205-(10)E / DSI302210-(10)E	3000x2200	3020	2230	800	1425
DSI302405-(10)E / DSI302410-(10)E	3000x2400	3020	2430	800	1425
DSI352005-(10)E / DSI352010-(10)E	3500x2000	3520	2030	800	1425
DSI352205-(10)E / DSI352210-(10)E	3500x2200	3520	2230	800	1425
DSI352405-(10)E / DSI352410-(10)E	3500x2400	3520	2430	800	1425
DSI402005-(10)E / DSI402010-(10)E	4000x2000	4020	2030	800	1425
DSI402205-(10)E / DSI402210-(10)E	4000x2200	4020	2230	800	1425
DSI402405-(10)E / DSI402410-(10)E	4000x2400	4020	2430	800	1425

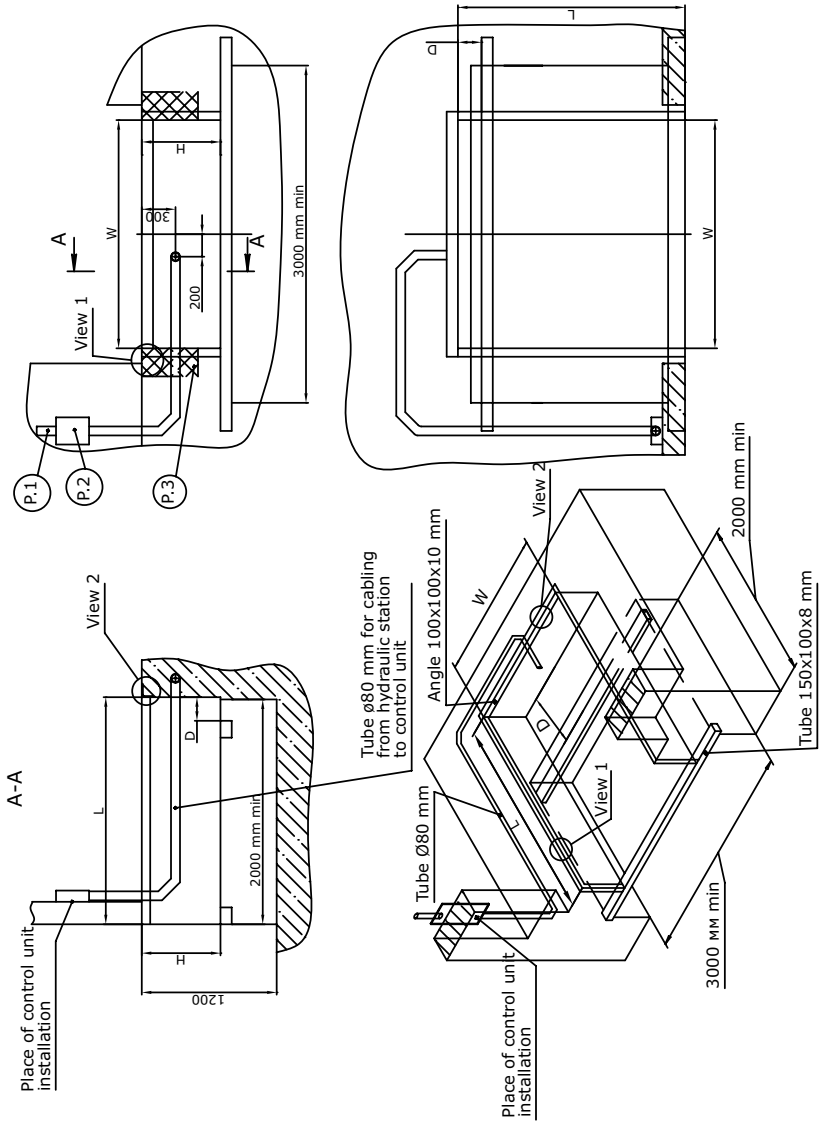

1. 380V (3 phase + neutral + earth) lead to dock leveller control unit installation place.
2. Area 200x300 mm shall be available for installation of dock leveller control unit.
3. Area for installation of rubber bumpers shall be available. (See Section "Optional Equipment")

This drawing illustrates pit preparation for dock leveller with sliding lip of embedded type with width 2000 mm, length 2000 mm and height 700 mm (article DSI202005E) intended for use with trucks, which are equipped with tail lift.

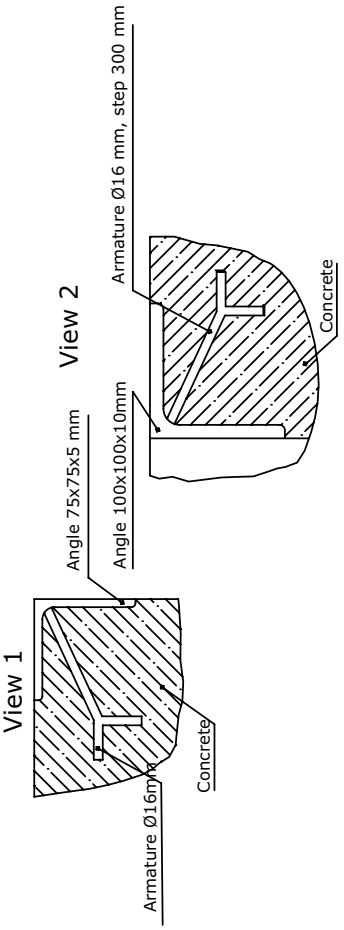

DSIE Model dock leveller

Pit preparation for dock leveller with sliding lip of embedded type intended for use with trucks, which are equipped with tail lift

1:1

DoorHan-Docking systems

Pit dimensions for dock leveller 6tn

Article od Dock leveller 500mm lip / Article od Dock leveller 1000mm lip	Dock leveller size (length x width), mm x mm	L, mm	W, mm	H, mm
DSI202005-(06)S/ -	2000x2000	2000	2060	700
DSI202205-(06)S/ -	2000x2200	2000	2260	700
DSI202405-(06)S/ -	2000x2400	2000	2460	700
DSI252005-(06)S/ DSI252010-(06)S	2500x2000	2500	2060	700
DSI252205-(06)S/ DSI252210-(06)S	2500x2200	2500	2260	700
DSI252405-(06)S/ DSI252410-(06)S	2500x2400	2500	2460	700
DSI302005-(06)S/ DSI302010-(06)S	3000x2000	3000	2060	800
DSI302205-(06)S/ DSI302210-(06)S	3000x2200	3000	2260	800
DSI302405-(06)S/ DSI302410-(06)S	3000x2400	3000	2460	800
DSI352005-(06)S/ DSI352010-(06)S	3500x2000	3500	2060	800
DSI352205-(06)S/ DSI352210-(06)S	3500x2200	3500	2260	800
DSI352405-(06)S/ DSI352410-(06)S	3500x2400	3500	2460	800
DSI402005-(06)S/ DSI402010-(06)S	4000x2000	4000	2060	800
DSI402205-(06)S/ DSI402210-(06)S	4000x2200	4000	2260	800
DSI402405-(06)S/ DSI402410-(06)S	4000x2400	4000	2460	800

Pit dimensions for dock leveller 10tn

Article od Dock leveller 500mm lip / Article od Dock leveller 1000mm lip	Dock leveller size (length x width), mm x mm	L, mm	W, mm	H, mm
DSI202005-(10)S/ -	2000x2000	2000	2060	700
DSI202205-(10)S/ -	2000x2200	2000	2260	700
DSI202405-(10)S/ -	2000x2400	2000	2460	700
DSI252005-(10)S/ DSI252010-(10)S	2500x2000	2500	2060	700
DSI252205-(10)S/ DSI252210-(10)S	2500x2200	2500	2260	700
DSI252405-(10)S/ DSI252410-(10)S	2500x2400	2500	2460	700
DSI302005-(10)S/ DSI302010-(10)S	3000x2000	3000	2060	800
DSI302205-(10)S/ DSI302210-(10)S	3000x2200	3000	2260	800
DSI302405-(10)S/ DSI302410-(10)S	3000x2400	3000	2460	800
DSI352005-(10)S/ DSI352010-(10)S	3500x2000	3500	2060	800
DSI352205-(10)S/ DSI352210-(10)S	3500x2200	3500	2260	800
DSI352405-(10)S/ DSI352410-(10)S	3500x2400	3500	2460	800
DSI402005-(10)S/ DSI402010-(10)S	4000x2000	4000	2060	800
DSI402205-(10)S/ DSI402210-(10)S	4000x2200	4000	2260	800
DSI402405-(10)S/ DSI402410-(10)S	4000x2400	4000	2460	800

1. 380V (3 phase + neutral + earth) lead to dock leveller control unit installation place.
2. Area 200x300 mm shall be available for installation of dock leveller control unit.
3. Area for installation of rubber bumpers shall be available. (See Section "Optional Equipment")

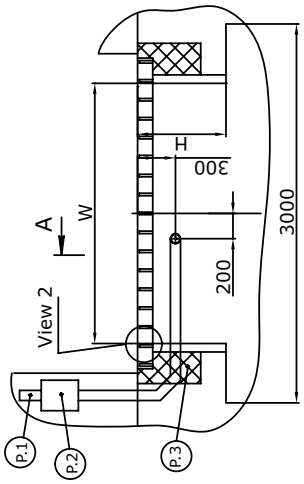

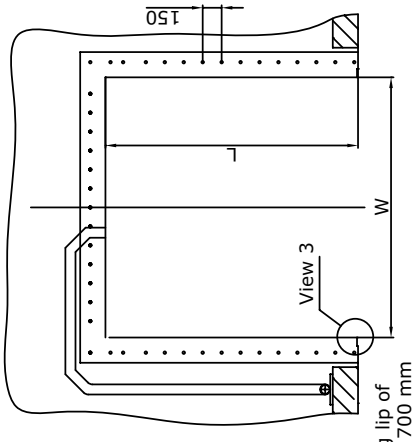

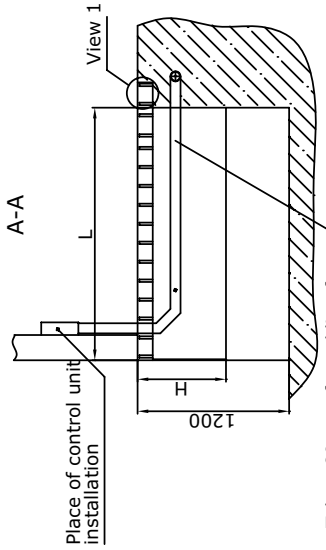

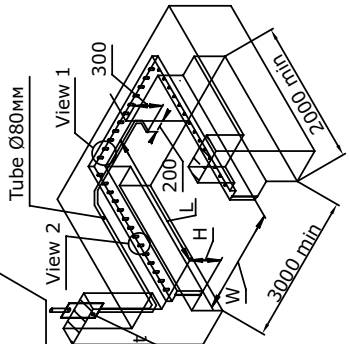

This drawing illustrates pit preparation for dock leveller with sliding lip of suspended type with width 2000 mm, length 2000 mm and height 700 mm (article DSI202005S)

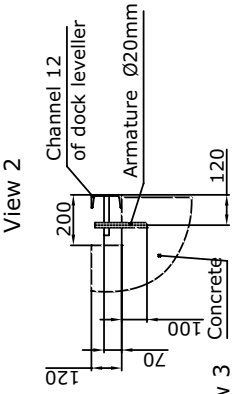

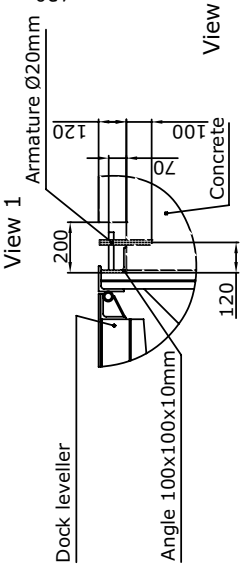

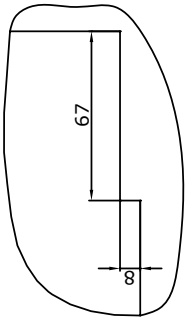

DSIS Model dock leveller

Pit preparation for dock leveller with sliding lip of suspended type

1:1

DoorHan-Docking systems

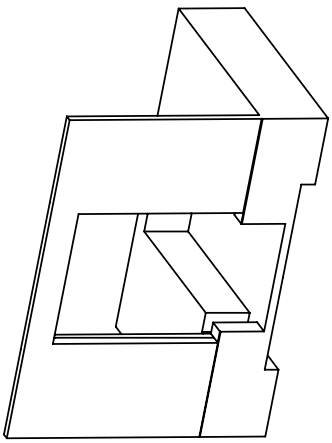

Pit dimensions

Article of dock leveller 6 tn / Article of dock leveller 10 tn	Dock leveller size (length x width), mm x mm	L, mm	W, mm	H, mm
DSI252010-(06)E / DSI152010-(10)E	2500x2000	2500	2030	700
DSI252210-(06)E / DSI152210-(10)E	2500x2200	2500	2230	700
DSI252410-(06)E / DSI152410-(10)E	2500x2400	2500	2430	700
DSI302010-(06)E / DSI302010-(10)E	3000x2000	3000	2030	800
DSI302210-(06)E / DSI302210-(10)E	3000x2200	3000	2230	800
DSI302410-(06)E / DSI302410-(10)E	3000x2400	3000	2430	800
DSI352010-(06)E / DSI352010-(10)E	3500x2000	3500	2030	800
DSI352210-(06)E / DSI352210-(10)E	3500x2200	3500	2230	800
DSI352410-(06)E / DSI352410-(10)E	3500x2400	3500	2430	800
DSI402010-(06)E / DSI402010-(10)E	4000x2000	4000	2030	800
DSI402210-(06)E / DSI402210-(10)E	4000x2200	4000	2230	800
DSI402410-(06)E / DSI402410-(10)E	4000x2400	4000	2430	800

1. 380V (3 phase + neutral + earth) lead to dock leveller control unit installation place.
2. Area 200x300 mm shall be available for installation of dock leveller control unit.
3. Area for installation of rubber bumpers shall be available. (See Section "Optional Equipment")
4. This installation drawing (door lowers in front of the dock leveller) can be used only for dock leveller with sliding lip 1000 mm.

DSIE Model dock leveller

Pit preparation for dock leveller with sliding lip 1000 mm of embedded type (in front of door)

1:1

DoorHan-Docking systems

A-A

Place of control unit installation

Tube ø80 mm for cabling from hydraulic station to control unit

Tube 150x100x6mm

View B

Tube 100x100x4mm (frame for installation of door)

This drawing illustrates pit preparation for dock leveller with sliding lip 1000 mm of embedded type with width 2000 mm, length 2500 mm and height 700 mm (article DSI252010E)

MECHANICAL DOCK LEVELLER OF MODL SERIES

MODL mechanical dock leveller does not require power supply and is a good alternative to the electrohydraulic dock leveller in case of power supply is not available. Manual efforts of 2 people are needed to rise the upper deck, at that the lip turns and opens automatically. Then the deck lowers until it rests on the truck bed. After loading/unloading is completed, the lip lowers; the deck rises and returns to its rest position. Dock leveller can be installed by either embedded or suspended way. Dock levellers of MODL series complies with rules and regulations of the European Standard EN 1398.

Main Advantages:

- self-cleaning hinges between deck and lip;
- lip length 400 mm;
- the lip remains in contact with truck bed even if the truck bed is inclined up up to 100mm from horisontal position;
- black/yellow safety marking;
- lip supports ensure safe cross movement along the upper deck in closed position;
- safety shutters prevent personal feet from jamming in the gap between the upper deck and the pit during operation;
- maintenance support beam ensures safe maintenance and repair of the dock leveller.

DIMENSIONS / FEATURES		
Length, mm	2500	
Width, mm	1800	2000
Working range		
Above the dock, mm	0-310	
Below the dock, mm	0-300	
Thickness of upper sheet, mm	5/(0,5-1,5)*	
Colour**	signal blue (RAL 5005)	

*** Riffling height is indicated in brackets.**
*** Powder coating with preliminary shot blasting.**

Sizes of dock levellers by their models are presented on Page 81. The dock levellers of nonstandard sizes, with different operation range and painted in any colour are also available.

PERFOMANCE	
Load capacity	6000 kg (60kN)
Maximal point load (upper sheet 5 mm)	1.3 N/mm²
Class of surface cleaning before painting	Sa 2
Thickness of painted layer	60-90 micron
Operation temperature range	From -30 to +50°C

WEIGHT OF DOCK LEVELLERS	
Length	2500 mm
Weight	850 kg

GENERAL VIEW

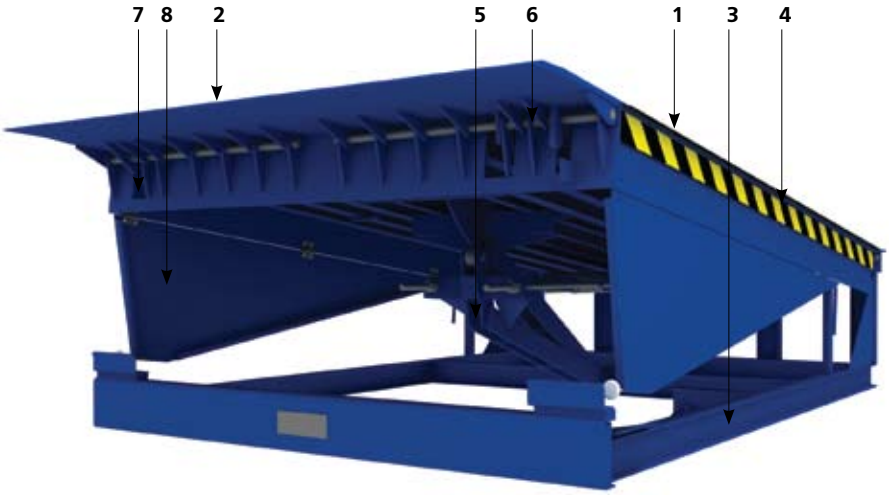

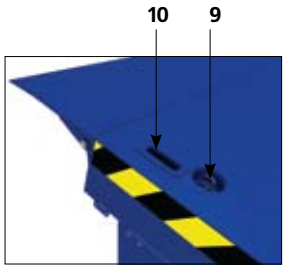

1. **Upper deck**
2. **Lip**
3. **Frame**
4. **Yellow–black stripping**
5. **Dock leveller balancing mechanisms**
6. **Lip opening mechanisms**
7. **Lip damping mechanisms**
8. **Safety shutters**
9. **Chain for lip operation**
10. **Handles for lift of dock leveller**

DESIGN

Upper deck of the dock leveller is made of steel 5 mm thick sheet with 0.5-1.5 mm high riffling and designed for work with a standard 4-wheel forklift with inflatable tyres. Small deformation of dock leveller surface is admissible, as it does not effect operation of the product. The lip is made of steel 12 mm thick sheet with 1.2-3.6 mm high riffling. The reinforcement profiles can be made of flanged beam 100 mm or L-shaped profile 140x140x4 mm, the frame is made of channel 100 mm.

PACKAGE		
	Standard	**Options**
Lip	400 mm, bevel 35 mm	
Mounting type	embedded/suspended	Other mounting type requested
Colour	Signal blue (RAL5005)	Any requested
Seal	PVC-seal along the perimeter	
Load capacity	6000	
Working range	From -300 to 310 mm	

Dock leveller dimensions

Article of dock leveller	Dock leveller size (length x width), mm x mm	L, mm	W, mm	H, mm
MODL2318E	2300x1800	2300	1800	600
MODL2320E	2300x2000	2300	2000	600

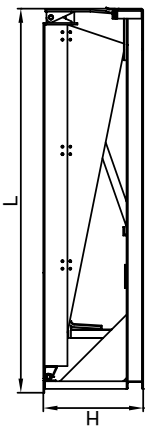

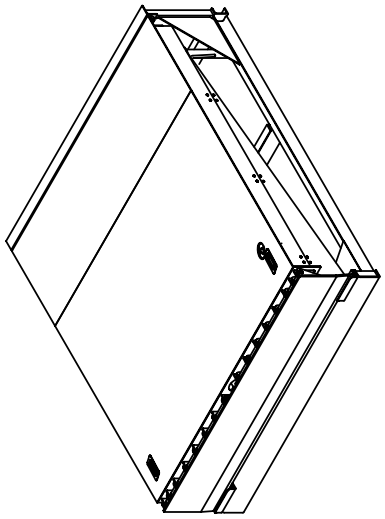

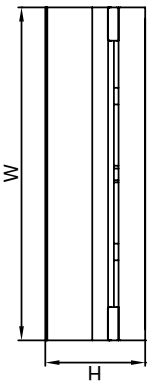

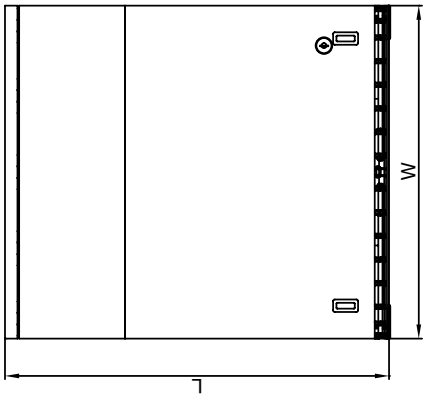

This drawing of manually operated dock leveller embedded type with width 2000 mm, length 2300 mm and height 600 mm (article MODL2320E)

For more detailed information, please contact DoorHan company.

MODL Model dock leveller		
Manually operated dock leveller embedded type	1:1	
DoorHan-Docking systems		

Dock leveller dimensions

Article of dock leveller	L, mm	W, mm	H, mm
MODL2318S	2300	1800	600
MODL2320S	2300	2000	600

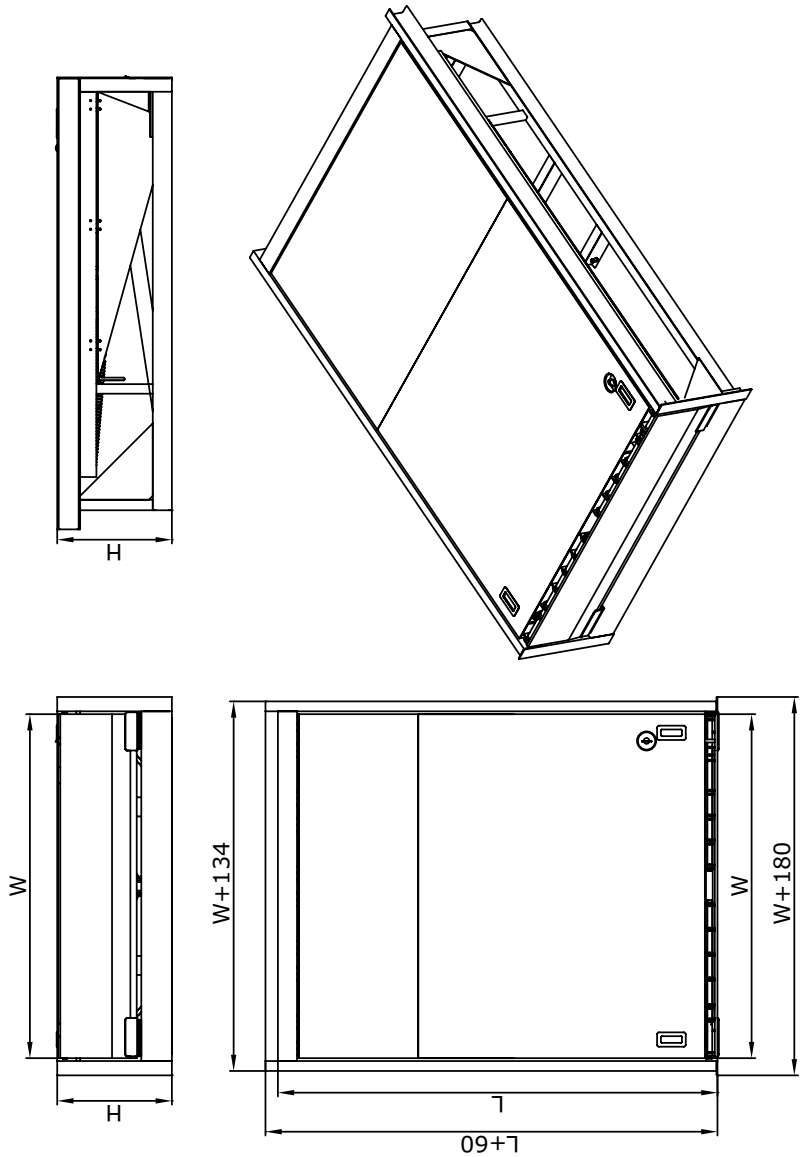

For more detailed information, please contact DoorHan company.

MODL Model dock leveller

Manually operated dock leveller suspended type

1:1

DoorHan-Docking systems

This drawing of manually operated dock leveller suspended type with width 1800 mm, length 2300mm and height 600mm (article MODL2320S)

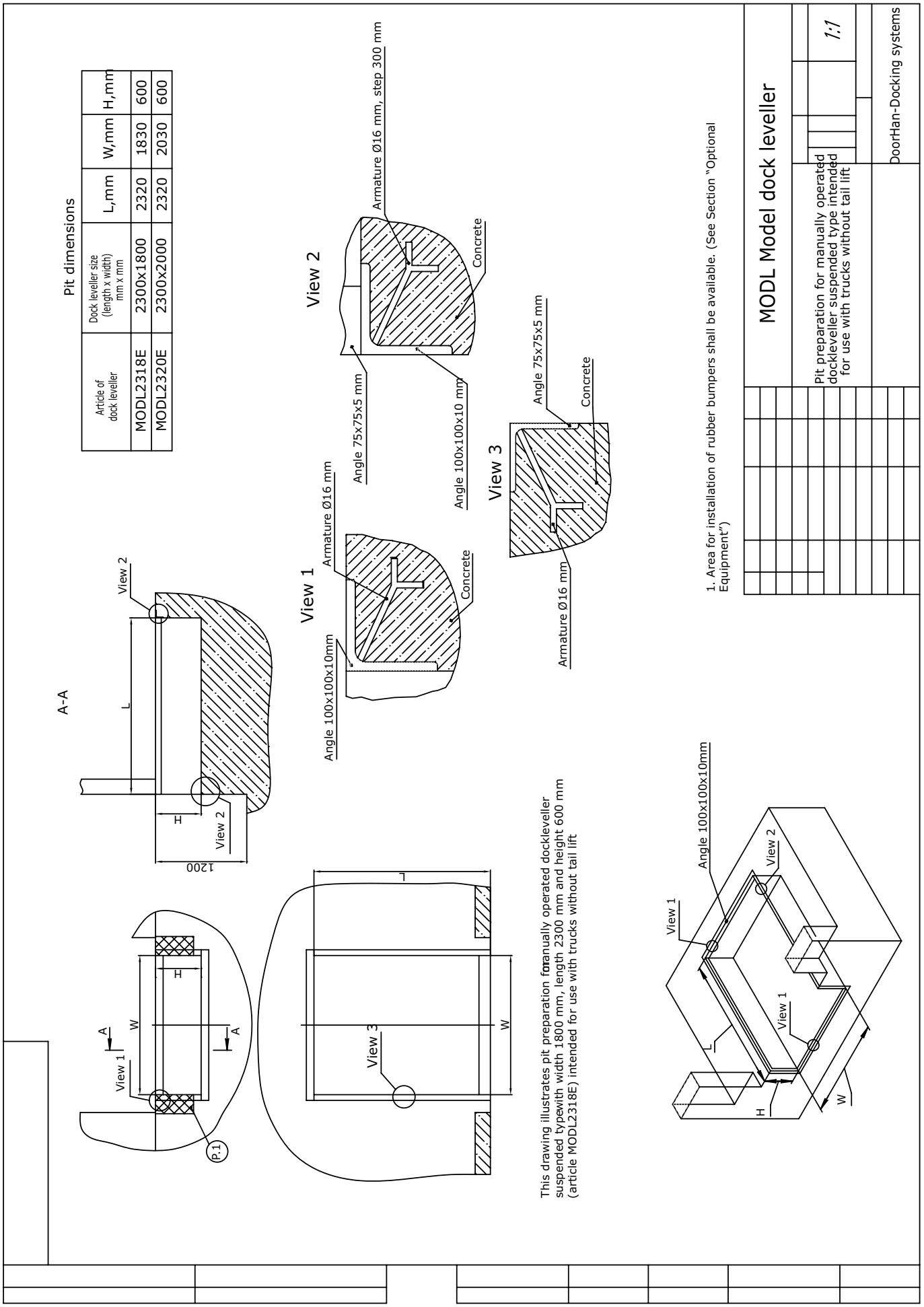
Pit dimensions
Article of dock leveller
Dock leveller size (length x width) mm x mm
L,mm
W,mm
H,mm
MODL2318E
2300x1800
2320
1830
600
MODL2320E
2300x2000
2320
2030
600
A-A
View 1
View 2
View 3
Armature Ø16 mm, step 300 mm
Angle 75x75x5 mm
Angle 100x100x10 mm
Concrete
Armature Ø16 mm
Angle 100x100x10mm
Armature Ø16 mm
1200
P.1
This drawing illustrates pit preparation for manually operated dockleveller suspended type with width 1800 mm, length 2300 mm and height 600 mm (article MODL2318E) intended for use with trucks without tail lift
1. Area for installation of rubber bumpers shall be available. (See Section "Optional Equipment")
MODL Model dock leveller
Pit preparation for manually operated dockleveller suspended type intended for use with trucks without tail lift
1:1
DoorHan-Docking systems

Pit dimensions

Article of dock leveller	Dock leveller size (length x width) mm x mm	L,mm	B,mm	H,mm	D,mm
MODL2318E	2300x1800	2320	1830	600	595
MODL2320E	2300x2000	2320	2030	600	595

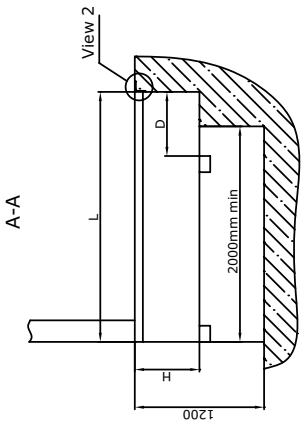

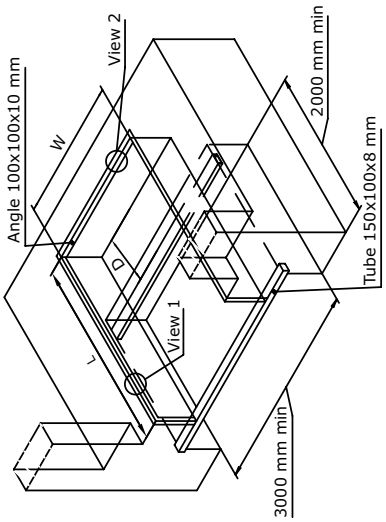

1. Area for installation of rubber bumpers shall be available. (See Section "Optional Equipment".)

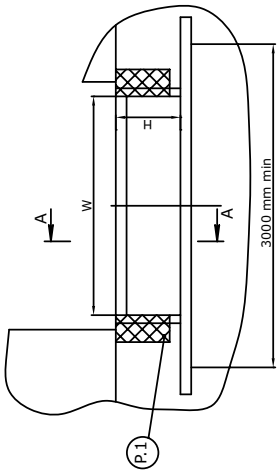

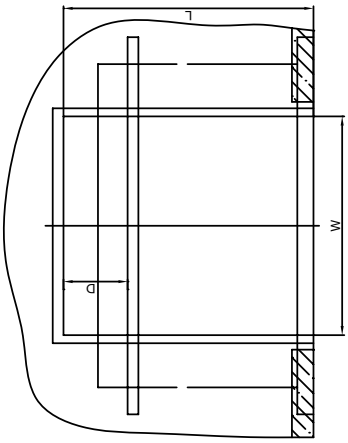

This drawing illustrates pit preparation for manually operated dockleveller embedded type with width 2000 mm, length 2300 mm and height 600 mm (article MODL2320E) intended for use with trucks, which are equipped with tail lift.

View 2

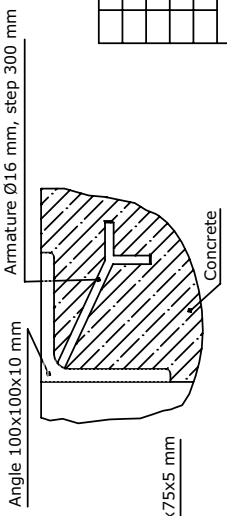

View 1

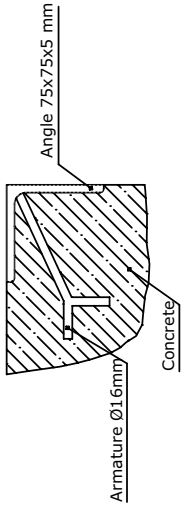

MODL Model dock leveller

Pit preparation for manually operated dockleveller embedded type intended for use with trucks, which are equipped with tail lift

1:1

DoorHan-Docking systems

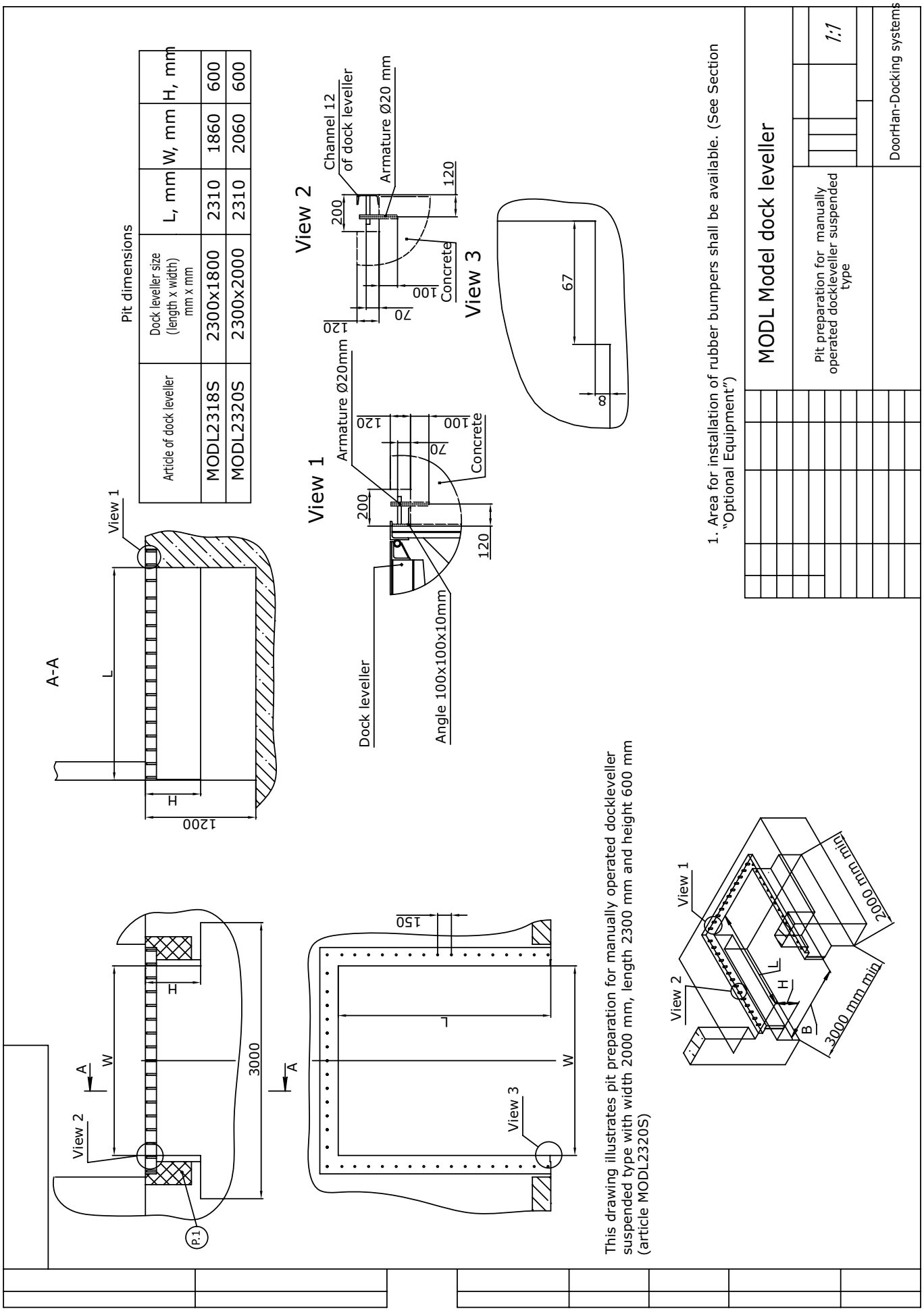
Pit dimensions
Article of dock leveller
Dock leveller size (length x width) mm x mm
L, mm
W, mm
H, mm
MODL2318S
2300x1800
2310
1860
600
MODL2320S
2300x2000
2310
2060
600
A-A
View 1
View 2
View 3
Channel 12 of dock leveller
Armature Ø20 mm
Concrete
Dock leveller
Angle 100x100x10mm
1200
3000
150
67
8
1. Area for installation of rubber bumpers shall be available. (See Section "Optional Equipment")
MODL Model dock leveller
Pit preparation for manually operated dockleveller suspended type
1:1
DoorHan-Docking systems
This drawing illustrates pit preparation for manually operated dockleveller suspended type with width 2000 mm, length 2300 mm and height 600 mm (article MODL2320S)
2000 mm min
3000 mm min

DOORHAN MECHANICAL FOLDING TRACKS

MECHANICAL FOLDING TRACK OF FT SERIES

FT mechanical folding tracks are installed on open ramps to compensate height difference up to 360 mm, depending on a model. They are intended for work with trucks or trailers, which have approximately the same height. When loading/unloading the track can be lowered in the truck body using the side handle until the lip rests on the truck bed. After loading/unloading is completed, the track rises and returns to its original position. Mechanical folding tracks can have stationary or sliding design. Sliding folding track allows to load/unload in several places, moving along the guide rail from one place to another. Mechanical folding tracks of FT series complies with rules and regulations of the European Standard EN 1398.

Main Advantages:

- lock which blocks the track in vertical position;
- black-yellow safety marking.

DIMENSIONS/FEATURES				
Length, mm	1000	1500		
Width, mm	1200	1500	1800	2000
Working range				
Above the dock, mm	120-180			
Below the dock, mm	120-180			
Thickness of track's upper sheet, mm	5			
Colour*	signal blue (RAL 5005)			

*** Powder coating with preliminary shot blasting.**

The mechanical folding tracks are also available in other colours.

PERFOMANCE	
Load capacity	4000 kg (40kN)
Maximal point load	1.3 N / mm^2
Class of cleaning before painting	Sa 2
Thickness of coating layer	60-90 micron
Operation temperature range	from -30 to +50 ^{0}C

WEIGHT OF MECHANICAL FOLDING TRACKS BY THEIR SIZES

Track size, mm	Weight, kg
1000x1200	150
1000x1500	170
1000x2000	220
1500x1500	240
1500x1800	280

GENERAL VIEW

Sliding Folding Track

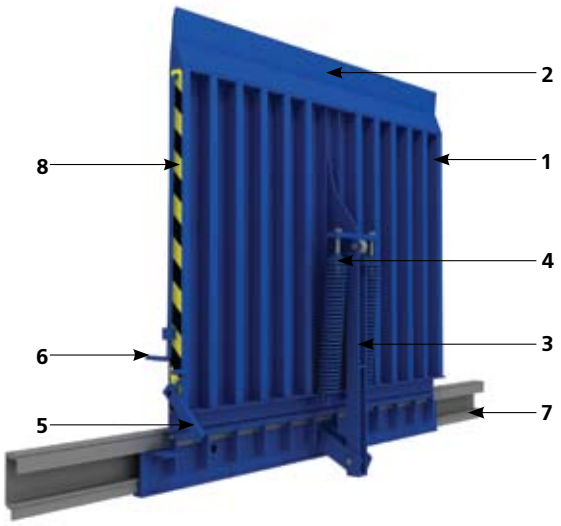

1. **Deck**
2. **Lip**
3. **Track spring balancing mechanism**
4. **Spring**
5. **Lock for blocking of track in vertical position**
6. **Handle for track operation**
7. **Guide rail (standard rail length L=3000 mm, supplied upon request)**
8. **Signal black-yellow stripping**

Stationary Folding Track

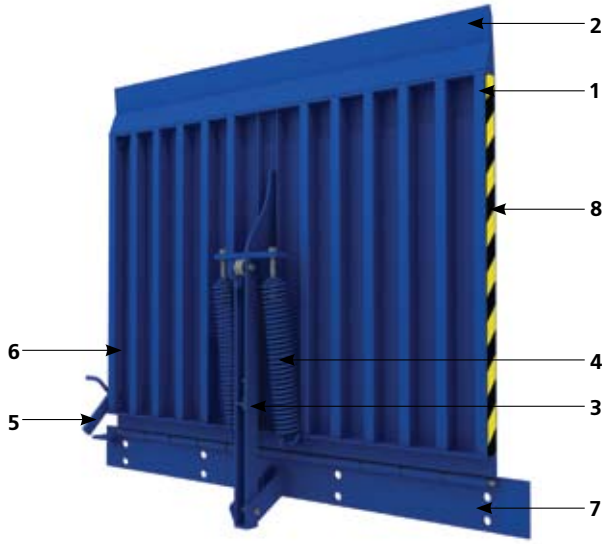

1. **Deck**
2. **Lip**
3. **Track spring balancing mechanism**
4. **Spring**
5. **Lock for blocking of track in vertical position**
6. **Handle**
7. **Mounting plate**
8. **Signal black-yellow stripping**

DESIGN

Upper deck of the folding track is made of steel 5 mm thick sheet with 0.5-1.5 mm high riffling and is designed for work with hydraulic hand-trucks and standard 4-wheel forklifts with inflatable tyres. Upon customer's request the track can be designed for work with equipment, which has high point load, such as electrical pilers. Small deformation of track upper sheet is admissible, as it does not effect operation of the product. The lip is made of steel 12 mm thick sheet with 1.2 -3.6 high mm riffling. The reinforcement profiles of the track are made of tube 60x40x3 mm. The track is equipped with lever balancing system, based on 2 springs and roller support. The guide rail is made of hot-rolled channel 160 mm.

PACKAGE

	Standard	Option
Mounting type	stationary/sliding	Any other upon request
Colour	Signal blue (RAL5005)	Any other colour upon request
Lip	210 mm , bevel 35 mm	
Load capacity	4000 kg (40 kN)	Other upon request

Sliding folding track

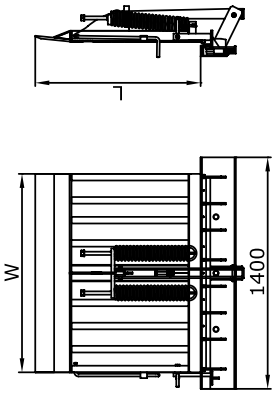

This drawing of sliding folding track 1000x1200 mm

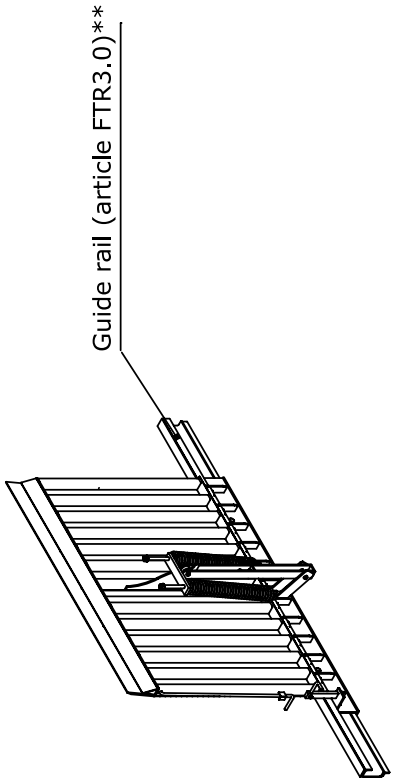

1.* : F – fixing folding track; ; S – sliding folding track
2. ** : Standard length of supplied rail L=3000 mm
3.For more detailed information, please contact DoorHan company.

FT Model folding track

Fixing and sliding folding track

1:1

DoorHan-Docking systems

Stationary folding track

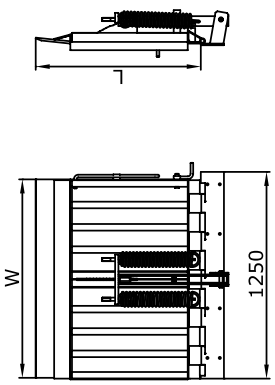

This drawing of fixing folding track 1000x1200 mm

Dimensions of folding tracks

Article	Dimension of track LxW,mm x mm
FT1012F/S*	1000x1200
FT1015F/S	1000x1500
FT1020F/S	1000x2000
FT1515F/S	1500x1500
FT1518F/S	1500x1800

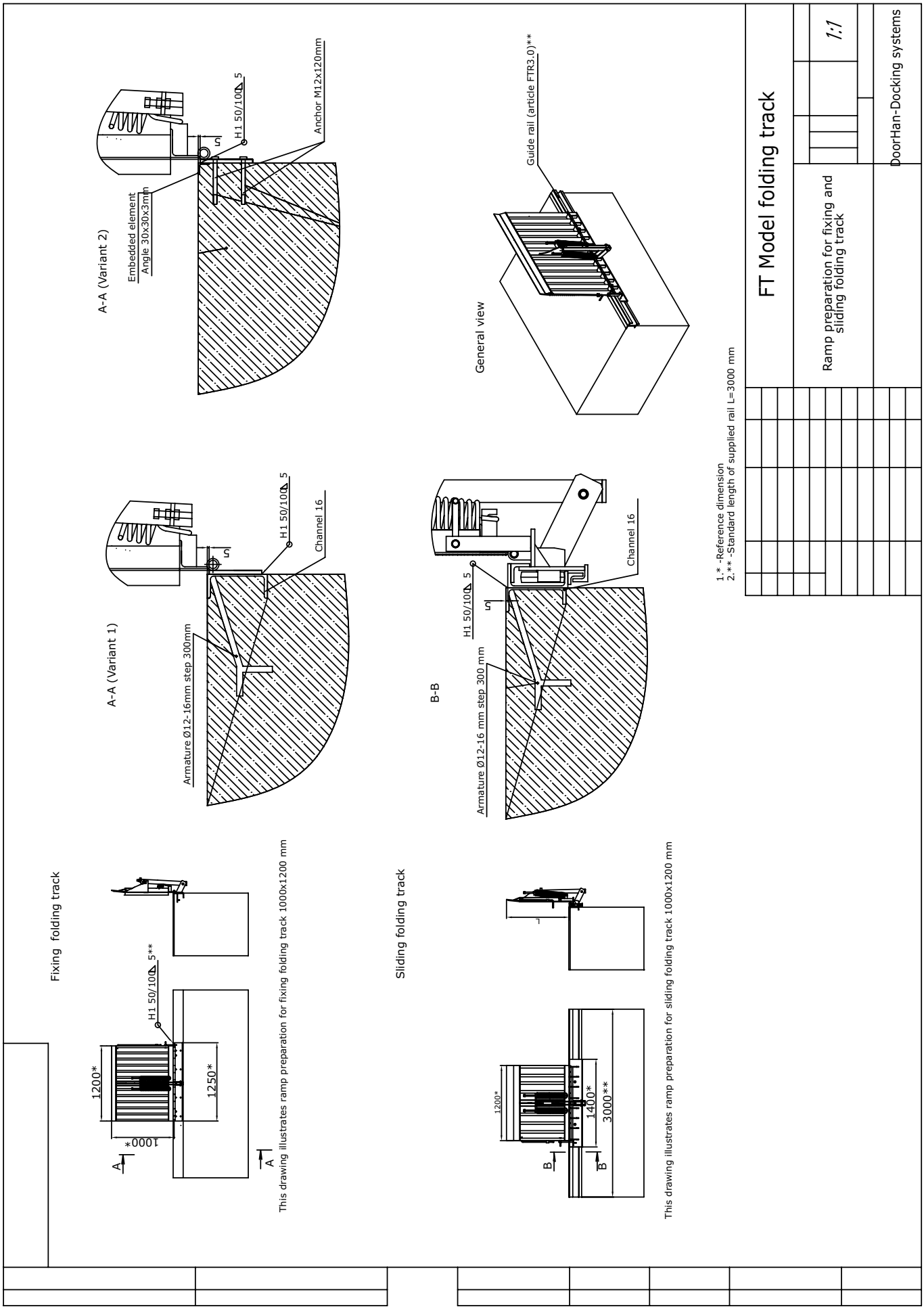
A-A (Variant 2)
Embedded element
Angle 30x30x3mm
H1 50/100 5
Anchor M12x120mm
General view
Guide rail (article FTR3.0)**
A-A (Variant 1)
Armature Ø12-16mm step 300mm
H1 50/100 5
Channel 16
B-B
Armature Ø12-16 mm step 300 mm
H1 50/100 5
Channel 16
1.* -Reference dimension
2.** -Standard length of supplied rail L=3000 mm
FT Model folding track
Ramp preparation for fixing and sliding folding track
1:1
DoorHan-Docking systems
Fixing folding track
H1 50/100 5**
1200*
1250*
1000*
A
A
This drawing illustrates ramp preparation for fixing folding track 1000x1200 mm
Sliding folding track
1200*
1400*
3000**
B
B
This drawing illustrates ramp preparation for sliding folding track 1000x1200 mm

DOORHAN MOBILE TRACKS

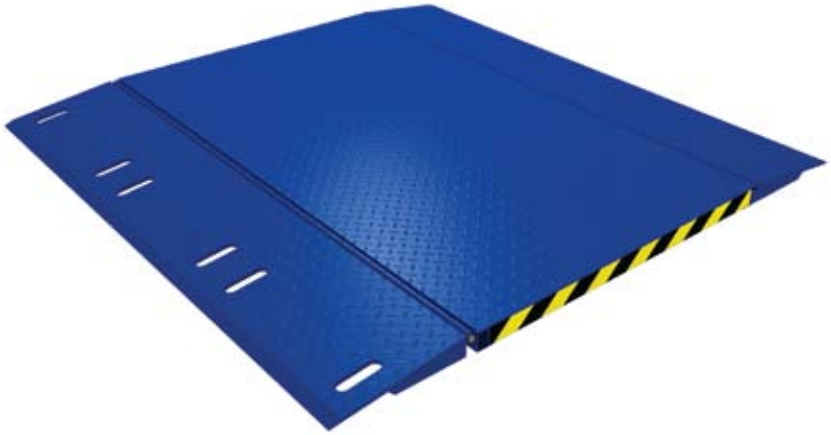

MOBILE TRACK OF MT SERIES

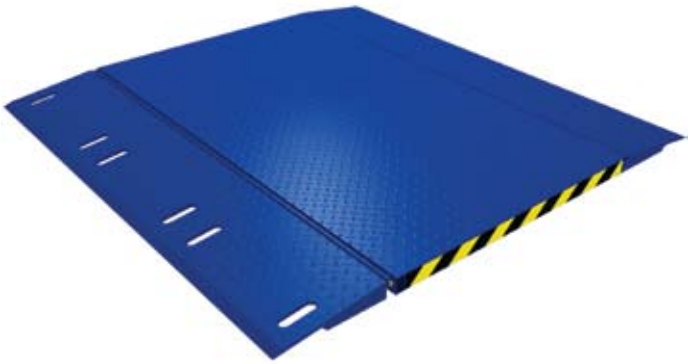

MT mobile tracks are used for loading/unloading when standard dock leveler or folding track can not be used. They are designed for using with trucks which have approximately the same height and the above the ramp level. The mobile track can compensate height difference up to 240 mm. The track can be transported to the required place using a forklift. Mobile tracks of MT series complies with rules and regulations of the European Standard EN 1398.

Main Advantages:

- guides for forklift, used for transportation of the mobile track;
- black-yellow safety marking.

DIMENSIONS/FEATURES		
Length, mm	2000	
Width, mm	1800	2000
Working range		
Above the dock, mm	0-240	
Below the dock, mm	-	
Thickness of tracks's upper sheet, mm	5	
Colour*	signal blue (RAL 5005)	

*** Powder coating with preliminary shot blasting.**

The mechanical folding tracks of nonstandard sizes and in other colour are also available upon request.

PERFOMANCE	
Parameter	
Load capacity	4000 kg (40kN)
Maximal point load	1,3 N/mm²
Class of surface cleaning before coating	Sa 2
Thickness of coating painted layer	60-90 micron
Operation temperature range	from -30 to +50 ⁰C

WEIGHT OF MECHANICAL FOLDING TRACKS	
Track size, mm	**Weight, kg**
1800x2000	340
2000x2000	370

GENERAL VIEW

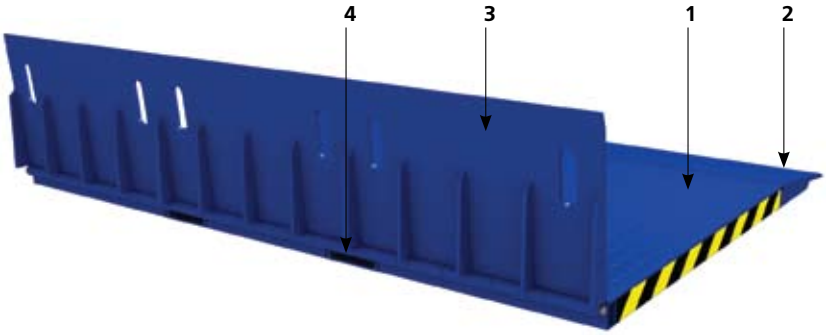

1. **Track**
2. **Fixed lip**
3. **Turning lip**
4. **Guides for forklift**

DESIGN

Deck of the track is made of 5mm steel sheet 0.5-1.5 mm high riffling and it is designed for work ing with hydraulic hand-trucks and It standard 4-wheel forklifts with inflatable tyres. Upon customer's request the track can be designed for high point load. Small deformation of track surface is admissible, as it does not effect operation of product. The lip is made of steel 12 mm thick sheet with 1.2-3.6 mm high riffling. The reinforcement profiles of the track are made of tube 60x40x3 mm, The track is equipped with a system for transportation, adapted to a standard forklift.

PACKAGE

	Standard	Option
Colour	Signal blue (RAL5005)	Any upon request
Turning/fixed lip	410 mm , bevel 35 mm	
Load capacity	4000 kg (40kN)	Other upon request

REFERENCE DIMENSIONS

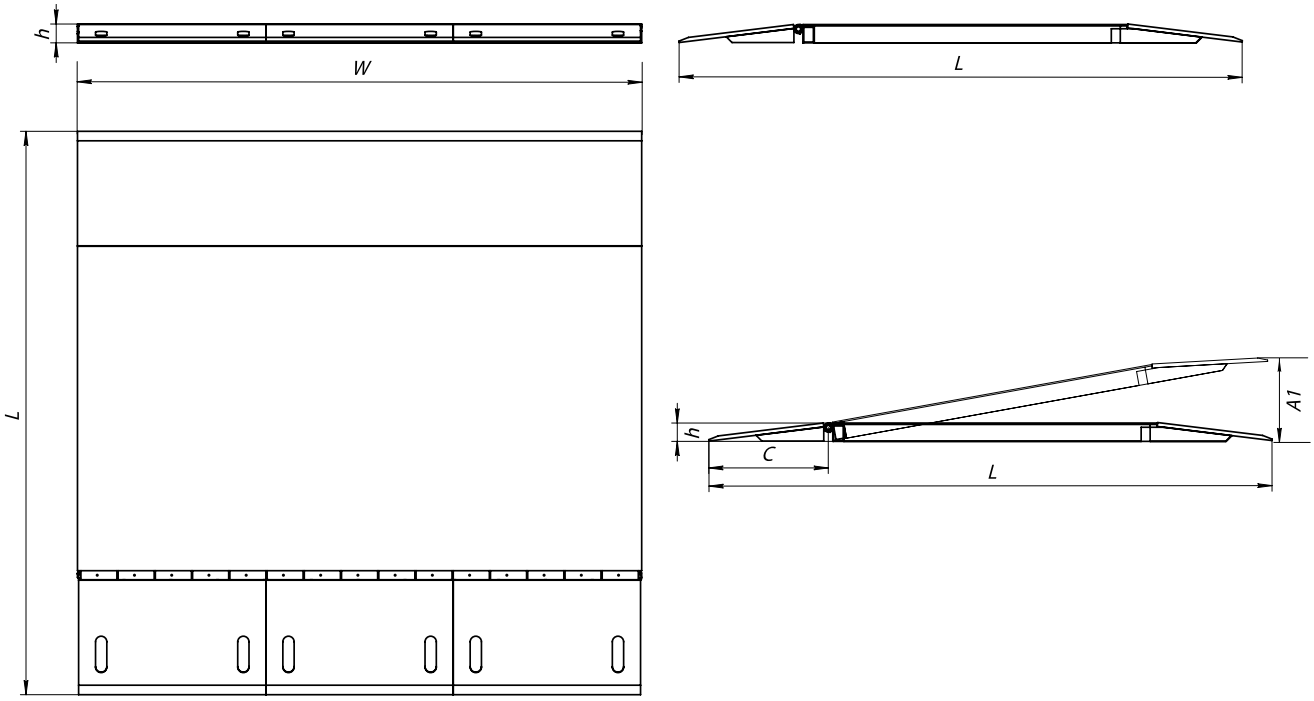

A1 – Working range

DIMENSIONS OF MOBILE TRACKS

	MT2018	MT2020
L, mm	2000	
W, mm	1800	2000
h, mm	65	
A1, mm	240	

For more detailed information, please contact to DoorHan company

DOORHAN MOBILE RAMPS

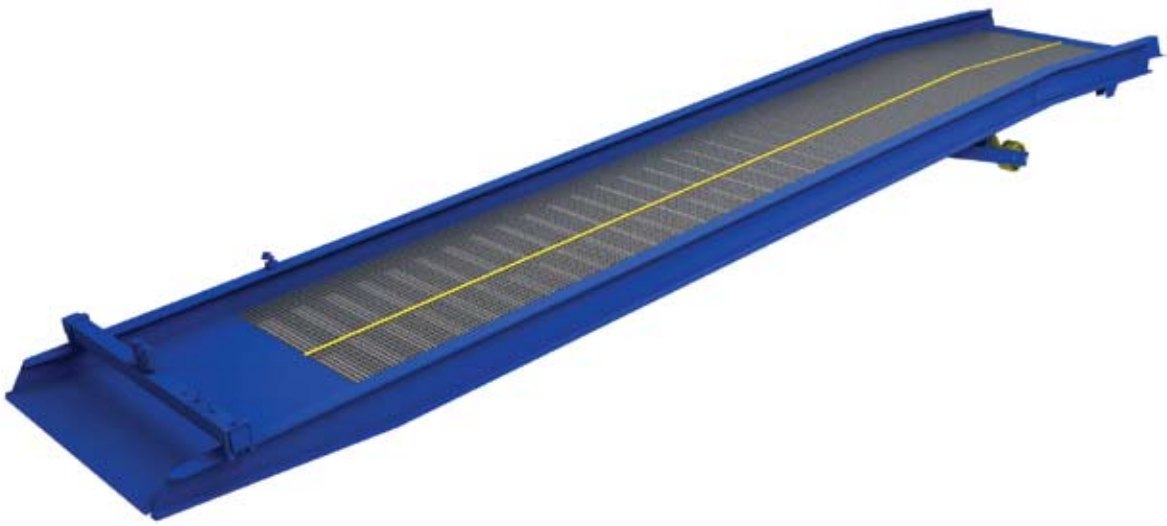

MOBILE RAMPS OF RMH SERIES

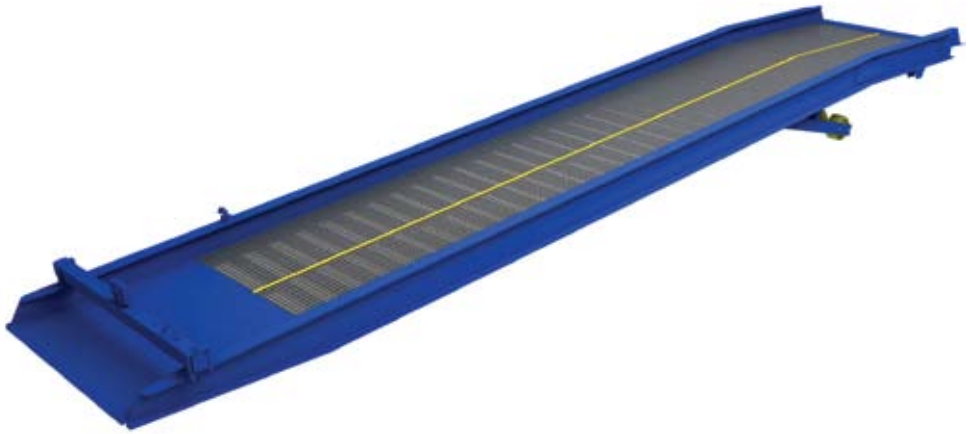

RMH mobile ramps are used for loading/unloading when standard dock leveler or folding track can not be used. They do not require any special preparation for start-up, there is no need of a stationary ramp. After activation the ramp is lifted using manual or hydraulic drive equipped with safety system, and moved to the truck by a forklift. After that, the ramp lowers until it reaches the truck floor. After loading/unloading is completed the ramp rises again and than it gets transported to the storing place. The ramp can be supplied with low temperature oil (up to –50 ºC). Mobile ramps of RMH series complie with rules and regulations of the European Standard EN 1398.

Main Advantages:

- lip length 340 mm;
- chain with saferty hook for fixation of ramp and truck body;
- all corners of the bearing structures are rounded, in order to ensure maximal safety;
- zinc coated gratings on the passage way.
- steel wheels with polyurethane rim allow using the ramp in the places, where inflatable wheels can be punctured.

DIMENSIONS/FEATURES	
Length, mm	12000
Width, mm	2300
Horizontal part length, mm	2360
Passage way width, mm	1920
Working range, mm	900-1500
Colour (enamel paint)	signal blue (RAL 5005)
Amount of lift cylindres	2

The mobile ramps of nonstandard sizes, other working range and in other colour are also available upon request.

PERFOMANCE	
Load capacity	6000 kg (60kN)/ 10000 kg (10kN)
Maximal point load	Standard – 1.3 N/mm², option – 6.5 N/mm²
Motor hydraulic unit	1.5 kW
Power supply*	380 V 3 phases
Control voltage*	24 V
Control unit protection class*	IP54
Working fluid	Mobil DTE10 EXCEL
Operation temperature range	From -30 to +50 C
Weight	3930 kg

*** For mobile ramps with hydraulic drive.**

GENERAL VIEW

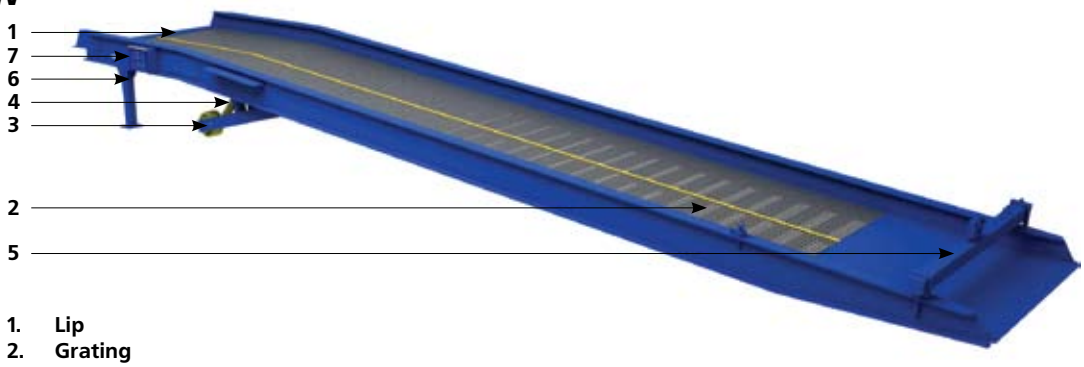

1. **Lip**
2. **Grating**
3. **Wheel**
4. **Lift cylinder**
5. **Trasportation mechanism**
6. **Transporation support (for initial transportation of ramp from manufacturing plant to place of operation)**
7. **Control unit (for mobile ramps with hydraulic electric drive)**

DESIGN

The side bearing profiles of the mobile ramp is made of flange beam 360 mm, cross beam profile is made of flange beam 100mm. The passage way is made of steel galvanized gratings which is made of of bearing stripes 30x3 mm with ribs of twisted square bar 5 mm. The standard mobile ramp is designed for loading/unloading using standard 4-wheel forklift with inflatable tyres, if maximal point load does not exceeds 1.3 N/mm2. For equipment with high point load, for example electrical pilers, it is necessary to order specially designed ramps (maximal load is 6.5N/mm2). The lip is made of 12 mm thick steel sheet with riffling height 1.2-3.6 mm. The entry on the ramp is also made of 8 mm thick steel sheet with riffling height 0.8-2.4 mm.

Small deformation of the gratings and the ramp entry deck is admissible, as it does not effect operability of the product.

PACKAGE		
	Standard	**Option**
Colour	Signal blue (RAL 5005)	Other upon request
Lip	340 mm, bevel 35 mm	
Hydraulic unit	2 lift cylinders	Low temperature oil -50 ⁰C
Load capacity	6000/10000 kg	Other upon request
Working range	from 900 to 1500 mm	Other upon request

REFERENCE DIMENSION

For the calculation of ramp operation area it is necessary to consider the truck length, the ramp length and area, required for forklift

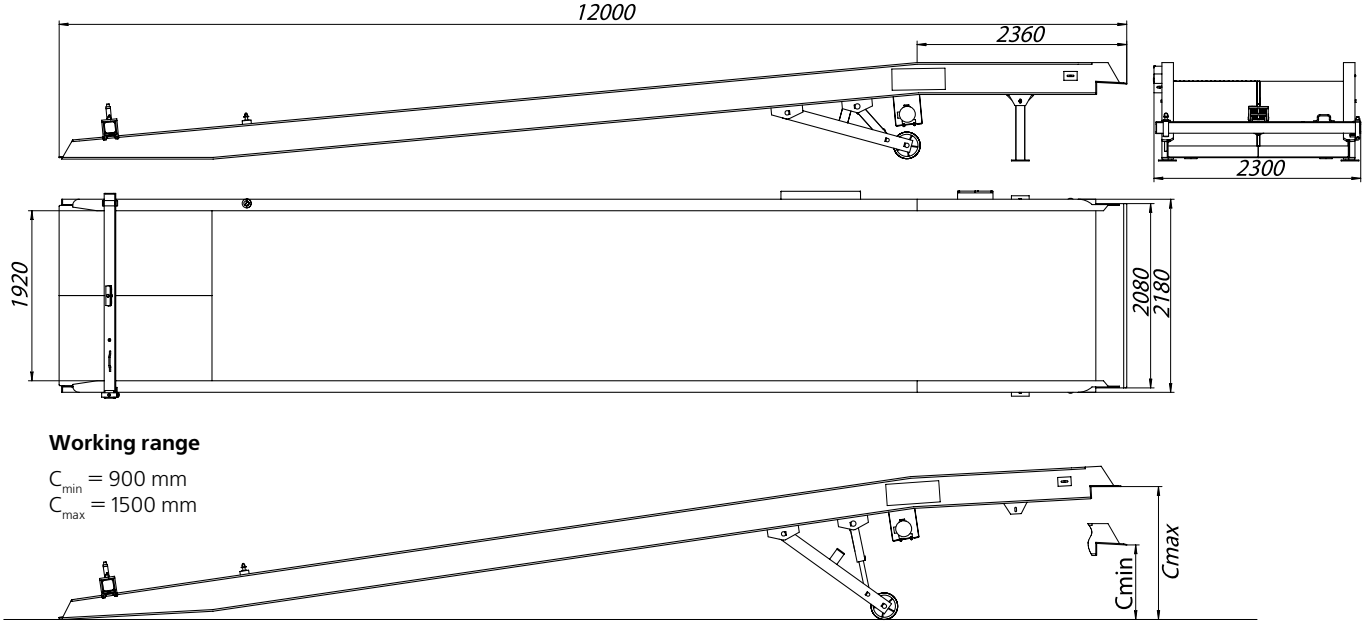

Working range

C_{min} = 900 mm
C_{max} = 1500 mm

For more detailed information, please contact to DoorHan company.

DOORHAN LIFTING TABLES

DOORHAN LIFTING TABLES

The DoorHan lifting table is a fixed lifting device intended for vertical transportation of the goods from one level of production/storage room to another. They can be used at multilevel parkings, at production lines, for supply of materials to the feeding unit level. It is a good alternative if a lift or stationary ramp for loading/unloading of trucks is not available.

Main Advantages:
- safety frame minimizes personal injury risk;
- distance between the levers is 30 mm, that provides finger protection;
- raising/lowering speed does not exceed 0.15 m/s;
- each lift cylinder is equipped with a built-in safety valve, which will lower upper deck with speed not exceeding 0.15m/s in case of hydraulic hose rupture.
- maximal noise level does not exceed 85 dB at 1 m distance from the device;
- all hydraulic components are designed for work under pressure, that is twice as much as the working pressure;
- protection class of control unit - IP54.

To choose of a lifting table model, please consider the following parameters:
- load distribution type;
- lifting height;
- upper deck size;
- load capacity.

Lifting tables are available in 4 types, depending on the load distribution:

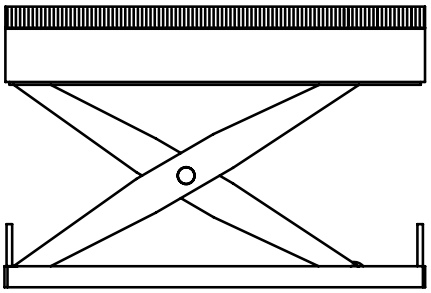

Type 100. Evenly distributed load.

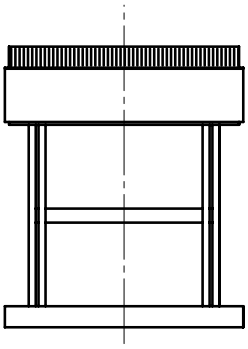

Load distribution (models AXL100, ADXL100)

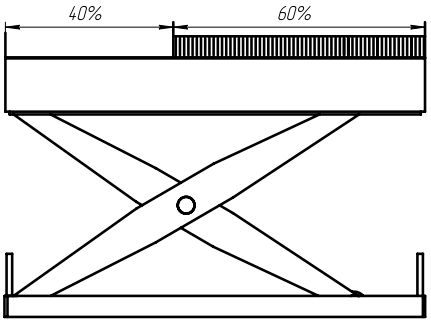

Type 200. partially distributed load

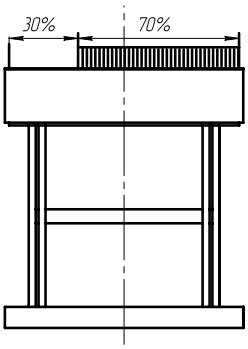

Load distribution (models AXL200, ADX200, ATX200, AXC2)

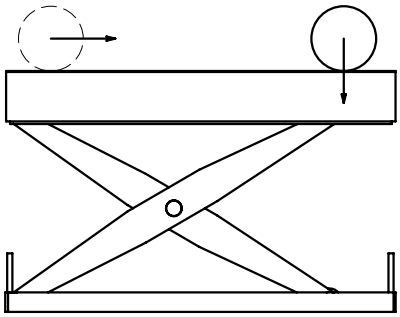

Type 300 Partially-concentrated load (not more than 50%) – objects are moved in direction of longitudinal axis

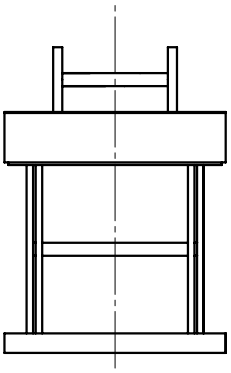

Move of weight with maximal load 50% on transverse axis (models AX300, ADX300, AXC3)

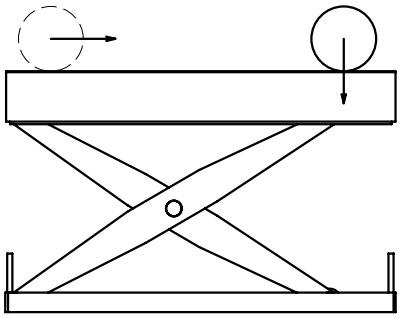

Type 400. Concentrated load – move of objects in direction of any axis

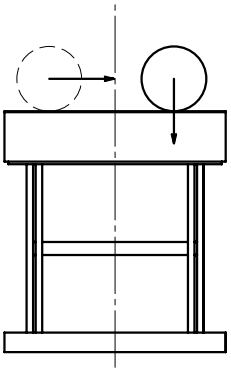

Loading of trucks using forklift 90% of load is born by 2 front wheels (models AX400, AXC4)

Identification of lifting tables contains main technical parameters.

Conventional Notations

Amount of scissors:
- AX – single scissor;
- ADX – double scissor;
- ATX – triple scissor;
- AQX – quadruple scissor.

Load distribution type:
- 100 – evenly distributed;
- 200 – partially distributed;
- 300 – partially concentrated;
- 400 – concentrated.

Hydraulic pump position:
- Int – pump is positioned inside the frame;
- Ext – pump is positioned outside the frame.

Example of identification table AX.100.2000.1000.0800.int:
- AX – lifting table with single scissor;
- 100 – evenly distributed load
- 2000 – load capacity 2000 kg;
- 1000 – lift height 1000 mm;
- 0800 – frame width 800 mm;
- Int. – hydraulic pump is positioned inside.

PERFOMANCE	
Electric motor	depends on table parameters*
Power supply	380V, 3 phase
Control voltage	24V
Control unit protection class	IP55
Working fluid	Mobil DTE11
Operation temperature range	from -30 to +50 ^{0}C
Weight	depends on table parameters

REFERENCE DIMENSIONS

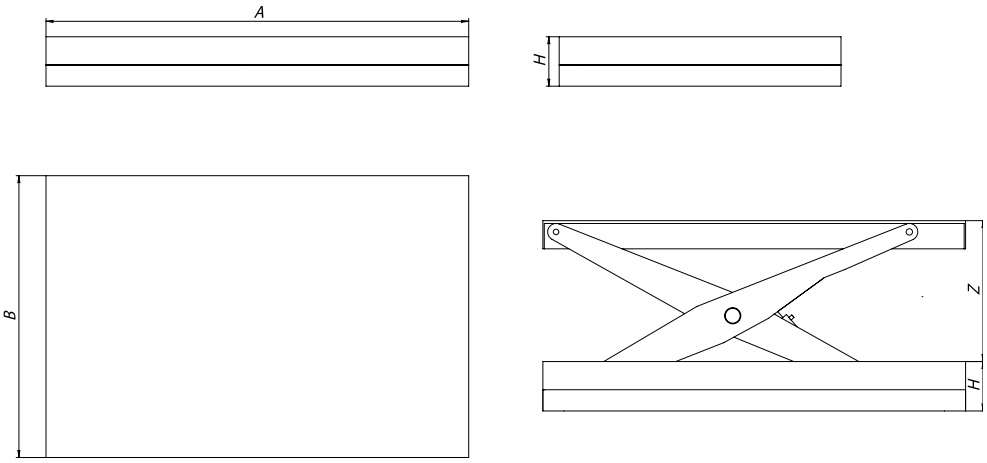

A – table length
B – table width
H – table height
Z – Table lift height

*** For more detailed information, please contact to DoorHan company.**

GENERAL VIEW

1. **Hydraulic power pack**
2. **Upper deck**
3. **Safety frame**
4. **Bottom frame**
5. **Scissor**
6. **Hydraulic cylinder**

DESIGN

The table cocnsist of a pair or several pairs of criss-cross legs (scissor), a platform with a safety frame, a bottom frame, hydraulic cylinders and a control unit.

The hydraulic power pack can be positioned either inside or outside the table frame.

PACKAGE

	Standard	Option
Mounting type	Embedded	Other upon request
Colour*	Reseda green (RAL6011)	other upon request
Lip		Segmented lip with manual or hydraulic operation
Load capacity	Up to 7000 kg	
Working range	Up to 5000 mm	
Dimensions	Upon request	
Control unit	One 2-button control unit	Two 2-button control units, two 2-button control units with lock, operation with pedal

DOORHAN DOCK SHELTERS

GENERAL INFORMATION ABOUT DOORHAN DOCK SHELTERS

DoorHan dock shelters are designed for sealing of space between the loading dock and truck body to obtain quick and safe loading/unloading of goods. Standard dimensions of dock shelters are designed for work with trucks of any size – from small truck to standard trailers. When loading/unloading a part of the truck body is positioned inside the dock shelter, so you can load/unload goods in any weather. At that microclimate of the storage rooms is kept and draught do not penetrate inside.

DoorHan dock shelters are availbale in 2 types – inflatable and curtain type. The curtain type dock shelters can be non-collapsible or with retractable structure.

Main Advantages:
- maintenanance-free
- PVC with synthetic reinforcement keeps elasticity within temperature range from -40 to +60 ^{0}C;
- roof of dock shelter is slanted to enable free flow of rain water.

DOCK SHELTERS WITH RETRACTABLE STRUCTURE OF D.SH-RT SERIES

D.SH-RT dock shelter with aluminium retractable structure is a classic model for installation where there is moderate cargo traffic. The front sheets are made of high elasticity, wear and tear resistant PVC. During loading/unloading a part of the truck body is positioned inside the dock shelter. The top and side sheets cover tightly the truck body and ensure sealing.

Main Advantages:
- aluminium folding frame;
- dock shelters are available with single or double upper sheet for better insulation;
- due to built-in springs the front folding frame can move (fold) preventing the damage in case if incorrect parking of a truck;
- white light-reflecticting stripes help to park a truck more easly.

DIMENSIONS/FEATURES				
Width, mm	3000	3200	3400	
Height, mm	3000	3200	3400	4400
Upper sheet				
Standard	single			
Upon request	double			
Colour of profiles	white aluminium (RAL 9006)			

Dock shelter dimensions are shown on Page 117. Dock shelters with aluminium folding frame of other dimensions are also available upon request.

PERFOMANCE	
Front PVC sheet	
Lengthwise tear resistance	more than 550 N
Widthwise tear resistance	more than 900 N
Ultimate tensile strength	250 N/mm
Metal friction coefficient	0.3
PVC friction coefficient	0.4
Thickness	3 mm
Specific weight	3.6 kg/m
Operation temperature	from -35 to +90 C
Side PVC sheet	
Tear resistance	250 N
Thickness	0.5 mm
Specific weight	0.7 kg/m
Working temperature	from -35 to +70 C
Aluminium frame	
Rear frame profiles	50x44 mm
Front frame profiles	45x44 mm
Brace	50x25x2.5 mm
Front clamping bar	34x4.8 mm

WEIGHT OF DOCK SHELTER WITH ALUMINIUM FRAME	
Article	**Weight, kg**
D.SH-RT 3,0x3,0	83,5
D.SH-RT 3,0x3,2	86
D.SH-RT 3,0x3,4	89,5
D.SH-RT 3,0x4,4	107
D.SH-RT 3,2x3,0	86
D.SH-RT 3,2x3,2	89
D.SH-RT 3,2x3,4	93
D.SH-RT 3,2x4,4	107
D.SH-RT 3,4x3,0	89,5
D.SH-RT 3,4x3,2	93
D.SH-RT 3,4x3,4	94,6
D.SH-RT 3,4x4,4	113

GENERAL VIEW

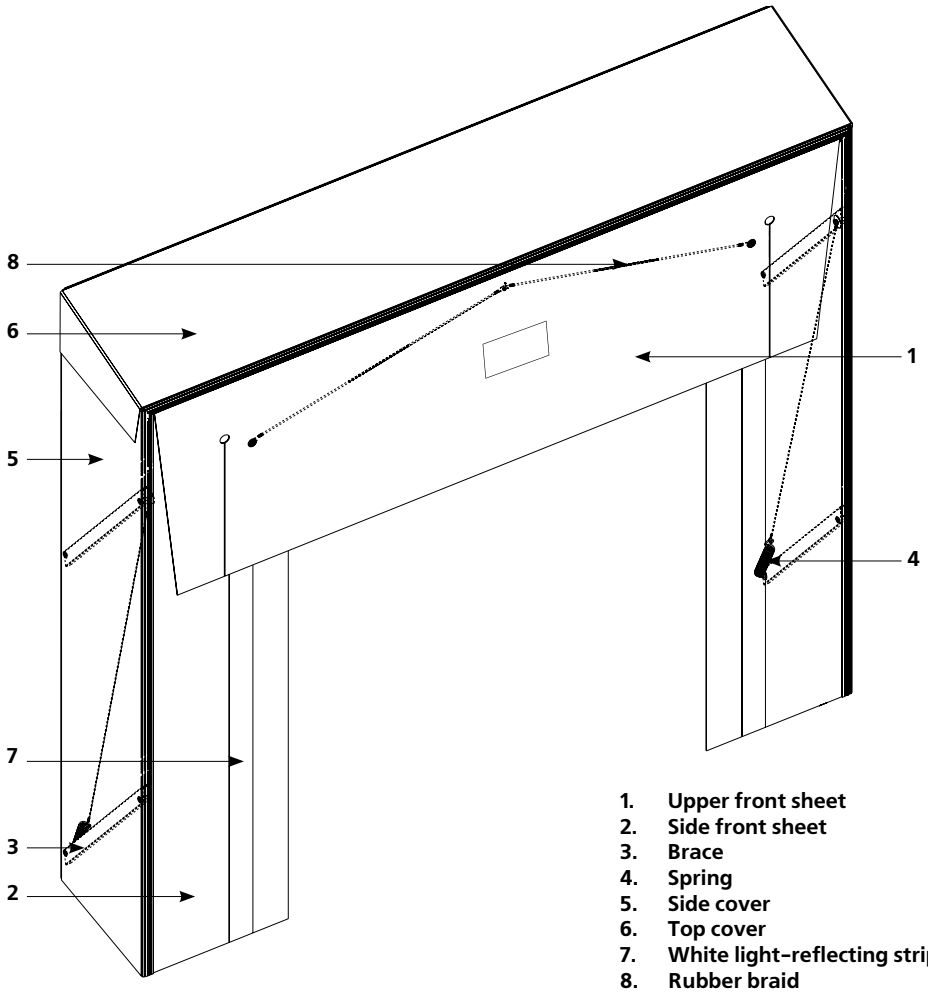

1. **Upper front sheet**
2. **Side front sheet**
3. **Brace**
4. **Spring**
5. **Side cover**
6. **Top cover**
7. **White light-reflecting stripe**
8. **Rubber braid**

DESIGN

D.SH-RT dock shelter consists of front and rear frames, made of aluminium profile and connected to each other using braces. There is a cable with spring, mounted in the point of frames connection, to give necessary flexibility. The front upper sheet and the front side sheets are made of PVC material reinforced with 2 layers of polyester. The upper sheet has special cuts to ensure more tight covering the truck body. White light-reflecting stripping on the front vertical sheets simplifies truck parking. The side and the top cover are made of PVC material with synthetic reinforcement.

PACKAGE

	Standard	Option
Dock shelter depth	600 mm	900 mm
Upper sheet	single	double
Profile colour	White aluminium (RAL9006)	other upon request
Seal	-	Small/large corner cushion in bottom part

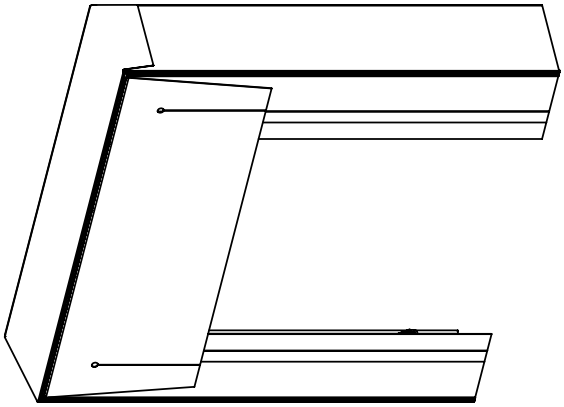

Dock shelter dimensions

Article	W, mm	H, mm	C, mm
D.SH-RT3,0x3,0	3000	3000	600
D.SH-RT3,2x3,2	3200	3200	600
D.SH-RT3,4x3,2	3400	3200	600
D.SH-RT3,2x3,4	3200	3400	600
D.SH-RT3,4x3,4	3400	3400	600
D.SH-RT3,4x4,4	3400	4400	600

For more detailed information, please contactDoorHan company.

D.SH-RT Model dock shelter

Лит. | Масса | Масштаб 1:1

Dock shelter with aluminium retractable frame

DoorHan-docking systems

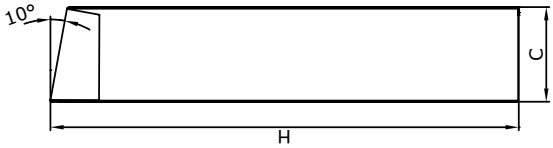

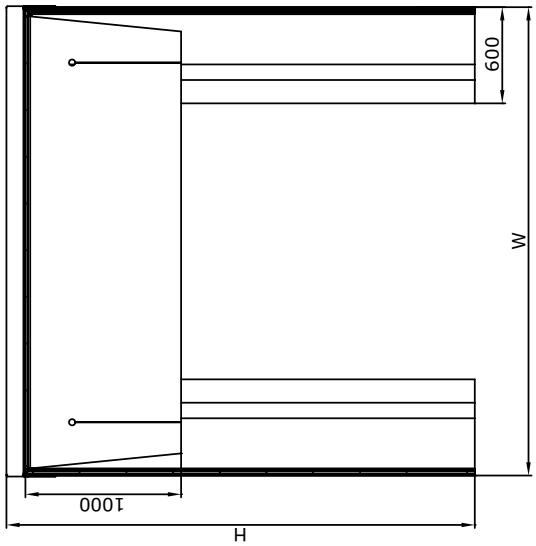

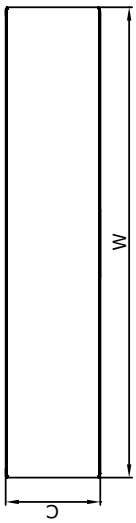

This drawing of dock shelter with aluminium retractable frame with width 3000 mm and height 3000 mm (article D.SH-RT3,0x3.0).

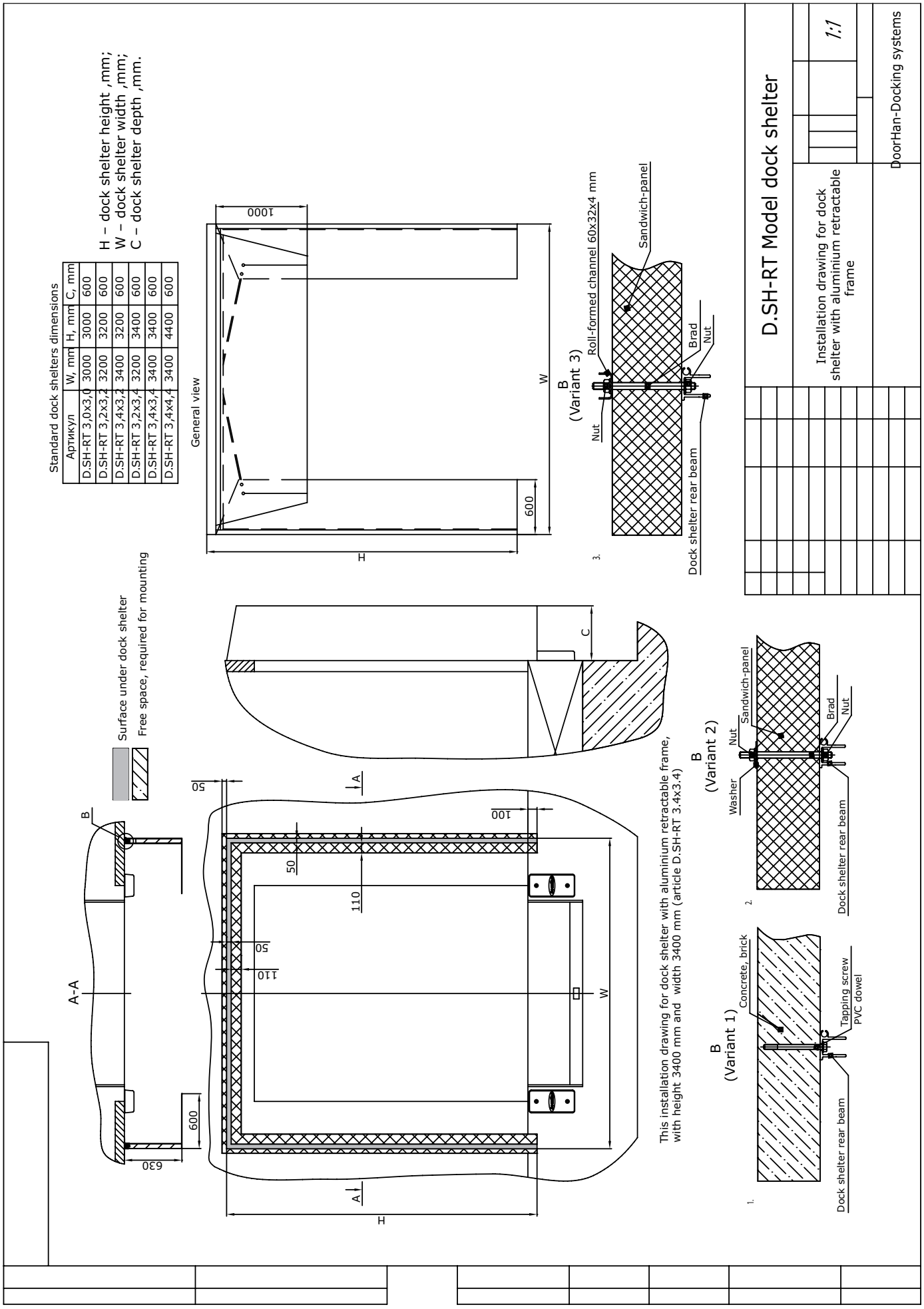
Standard dock shelters dimensions
Артикул | W, mm | H, mm | C, mm
D.SH-RT 3,0x3,0 | 3000 | 3000 | 600
D.SH-RT 3,2x3,2 | 3200 | 3200 | 600
D.SH-RT 3,4x3,2 | 3400 | 3200 | 600
D.SH-RT 3,2x3,4 | 3200 | 3400 | 600
D.SH-RT 3,4x3,4 | 3400 | 3400 | 600
D.SH-RT 3,4x4,4 | 3400 | 4400 | 600
H – dock shelter height ,mm;
W – dock shelter width ,mm;
C – dock shelter depth ,mm.
General view
1000
600
H
W
B
(Variant 3)
Roll-formed channel 60x32x4 mm
Sandwich-panel
Brad
Nut
Nut
Dock shelter rear beam
3.
C
Surface under dock shelter
Free space, required for mounting
A-A
B
630
600
50
110
50
110
50
100
A
A
H
W
This installation drawing for dock shelter with aluminium retractable frame, with height 3400 mm and width 3400 mm (article D.SH-RT 3.4x3.4)
B
(Variant 2)
Washer
Nut
Sandwich-panel
Brad
Nut
Dock shelter rear beam
2.
B
(Variant 1)
Concrete, brick
Tapping screw
PVC dowel
Dock shelter rear beam
1.
D.SH-RT Model dock shelter
Installation drawing for dock shelter with aluminium retractable frame
1:1
DoorHan-Docking systems

DOCK SHELTERS WITH NON-COLLAPSIBLE STRUCTURE OF D.SH-RD SERIES

D.SH-RD dock shelters with non-collapsible structure are designed for heavy cargo traffic. The structure is made of sandwich panels, edged with aluminium profiles. The front sheets are made of high elastic, wear and tear resistant PVC. During loading/unloading a part of the truck body is positioned inside the dock shelter. The top and side sheets cover tightly the truck body, ensure sealing. When using this type of dock shelters, it is recomended to install wheel guides or metal baffles.

Main Advantages:

- dock shelters are available with single or double upper sheet for better insulation;
- white light-reflecticting stripes help to park a truck more easly.

DIMENSIONS/FEATURES				
Width, mm	3000	3200	3400	
Height, mm	3000	3200	3400	4400
Upper sheet				
Standard	single			
Upon request	double			
Profile colour	white aluminium (RAL 9006)			
Colour of wall panels	white (RAL 9003)			

PERFOMANCE	
Front sheet – PVC	
Lengthwise tear resistance	more than 550 N
Widthwise tear resistance	more than 900 N
Ultimate tensile strength	250 N/mm
Metal friction coefficient	0,3
PVC friction coefficient	0,4
Thickness	3 mm
Specific weight	3,6 kg/m
Operation temperature	from -35 to +90 °C
Side wall – sandwich panel	
Thickness	40 mm

WEIGHT OF DOCK SHELTERS WITH NON-COLLAPSIBLE BY THEIR SIZES	
Article	**Weigh kg**
D.SH-RD 3,0x3,0	106
D.SH-RD 3,0x3,2	111
D.SH-RD 3,0x3,4	116
D.SH-RD 3,0x4,4	139
D.SH-RD 3,2x3,0	109
D.SH-RD 3,2x3,2	113
D.SH-RD 3,2x3,4	118
D.SH-RD 3,2x4,4	142
D.SH-RD 3,4x3,0	111
D.SH-RD 3,4x3,2	116
D.SH-RD 3,4x3,4	120
D.SH-RD 3,4x4,4	144

GENERAL VIEW

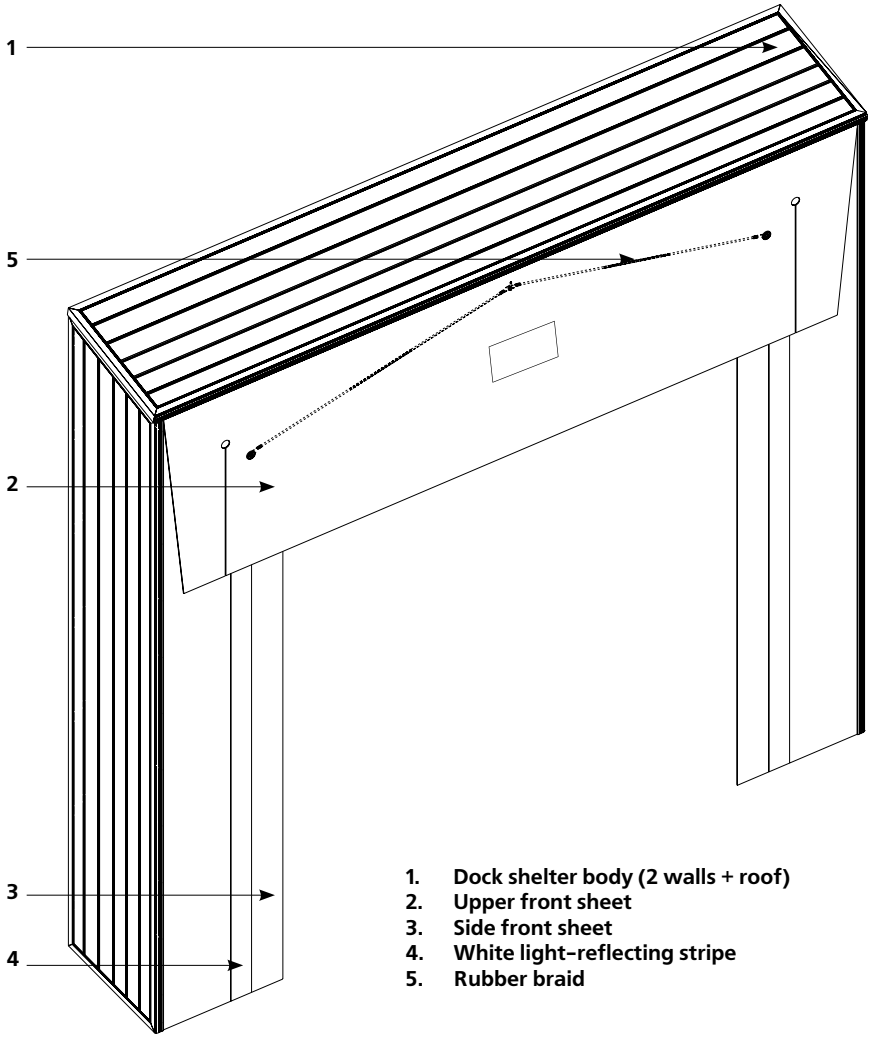

1. **Dock shelter body (2 walls + roof)**
2. **Upper front sheet**
3. **Side front sheet**
4. **White light-reflecting stripe**
5. **Rubber braid**

DESIGN

D.SH-RD dock shelter consists of two walls and roof, which are assembled of 40 mm sandwich panels with aluminium profile edging. The front upper and side sheets are made of PVC material reinforced with 2 layers of polyester. The upper sheet has special cuts to ensure tight covering the truck body.

The vertical front sheets have white light-reflecting stripes to simplify parking of a truck.

PACKAGE

	Standard	Option
Dock shelter depth	600 mm	900 mm
Upper sheet	single	double
Panel colour	Signal white (RAL9003)	Other upon request
Profile color	White aluminium (RAL9006)	Other upon request
Seal		Small/large cushion in bottom part

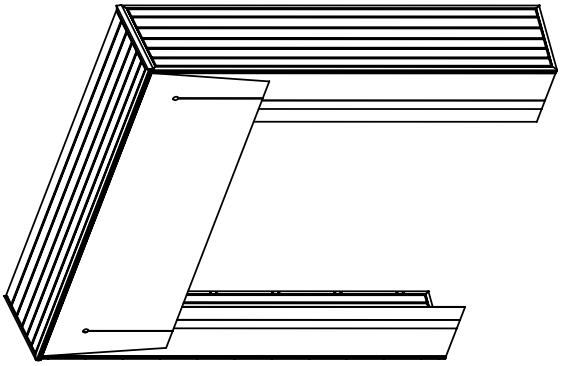

Dock shelter dimensions

Article	W, mm	H, mm	C, mm
D.SH-RD3,0x3,0	3000	3000	625
D.SH-RD3,2x3,2	3200	3200	625
D.SH-RD3,4x3,2	3400	3200	625
D.SH-RD3,2x3,4	3200	3400	625
D.SH-RD3,4x3,4	3400	3400	625
D.SH-RD3,4x4,4	3400	4400	625

For more detailed information, please contact DoorHan company.

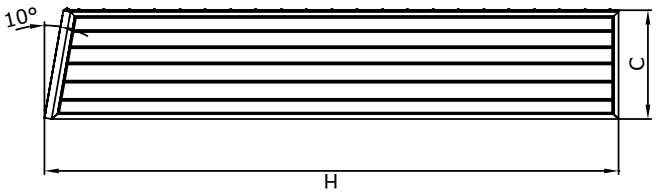

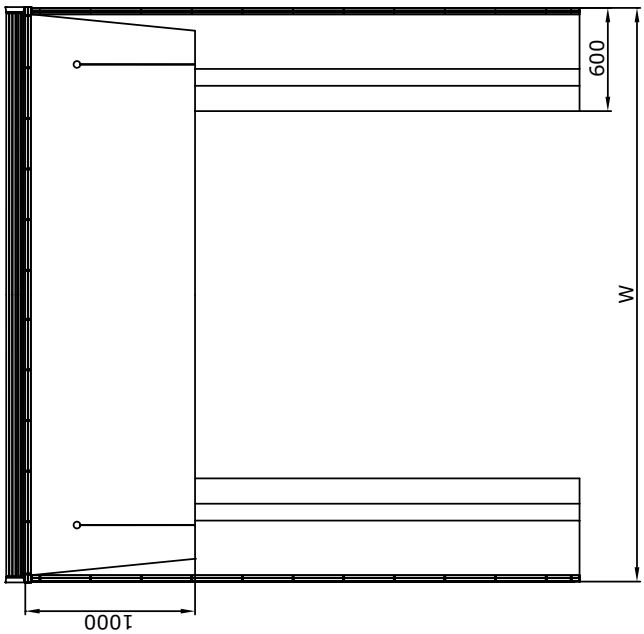

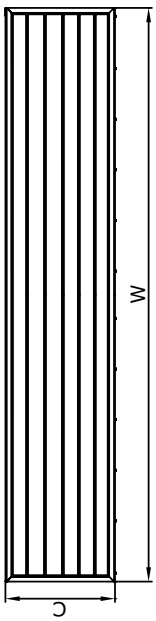

This drawing for dock shelter width 3400 mm, height 3400mm with rigid frame (article D.SH-RD 3.4x3.4)

D.SH-RD Model dock shelter

Dockshelter with rigid frame

1:1

DoorHan-Docking systems

Standard dock shelters dimensions

Article	W, mm	H, mm	C, mm
D.SH-RD 3,0x3,0	3000	3000	625
D.SH-RD 3,2x3,2	3200	3200	625
D.SH-RD 3,4x3,2	3400	3200	625
D.SH-RD 3,2x3,4	3200	3400	625
D.SH-RD 3,4x3,4	3400	3400	625
D.SH-RD 3,4x4,4	3400	4400	625

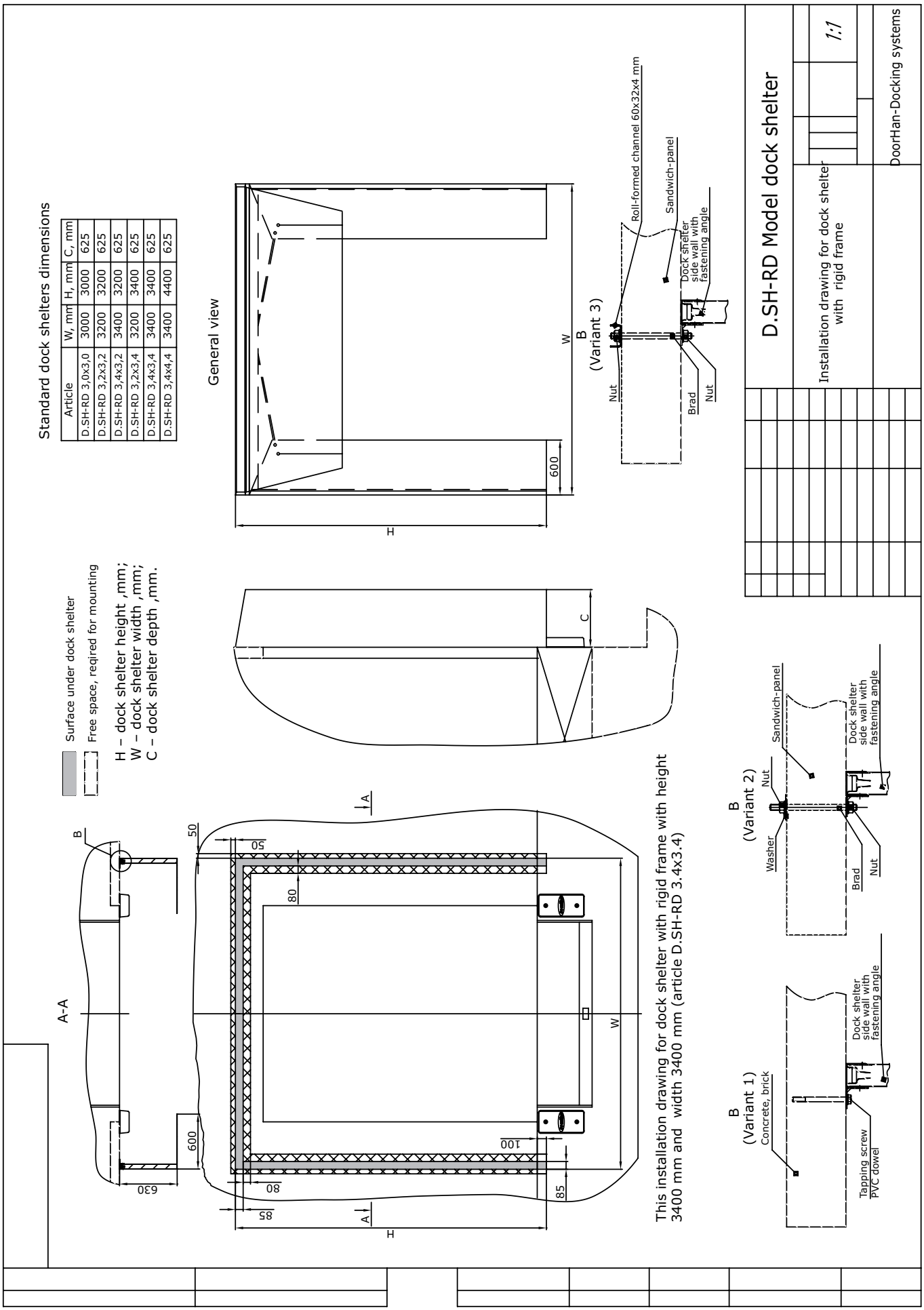

INFLATABLE DOCK SHELTERS OF DSHINF SERIES

DSHINF inflatable dock shelters provide the best sealing of temperature controlled premises during the loading and unloading. Inflatable cushions cover the truck body around in a way that the optimal sealing is obtained. The cushions are made of high elastic, wear and tear resistant material Cordura. During loading/unloading a part of the truck body is positioned inside the dock shelter. The upper and side cushions inflate to ensure high sealing between the truck body and the building. After loading/unloading is completed, the cushions deflate. The inflatable dock shelters are controlled by switch or the control unit of the dock leveller (if special control unit with function for inflatable dock shelter is used). It is recommended to mount guide wheels and metal baffles.

Main Advantages:

- cushions are made of wear-resistant material;
- active extension of upper cushion can be encreased up to 1200 mm to use with various types of trucks;
- inflatable dock shelters can be operated from the dock leveller control unit.

DIMENSIONS/FEATURES			
Width, mm	3410	3610	
Height, mm	3300	3800	4900
Upper cushion extension, mm	900 (1200)		
Side cushion extension, mm	600		
Upper decorative curtain, mm	500		
Side decorative curtain, mm	200		
Profile colour	white aluminium (RAL 9006)		
Wall panel colour	signal white (RAL 9003)		
Control	Switch /dock leveler control unit		

The dock shelters of non-standard sizes are available upon request.

PERFOMANCE	
Control system	
Power supply 1 or 3 phase	222/380 V, 50 Hz
Motor	0.18-0.35kW
Control unit	external
Protection class of control unit	IP54
Average time of cushion inflation	40 sec
Working temperature	From -35 to +70 C
Decorative PVC curtain	3.6 kg/m
Thickness	3 mm
Specific weight	3.6 kg/m
Inflatable cushions	0.5 mm
Material	Cordura 1000
Thickness	0.5 mm
Specific weight	0.4 kg/m
Ultimate tensile strength	More than 290N/mm
Sandwich panel	
Thickness	40 mm
Colour on inside/outside	Signal white (RAL9003)

WEIGHT OF INFLATABLE DOCK SHELTERS	
Article	**Weight**
DSHINF 3,8x3,6	230
DSHINF 4,9x3,6	290
DSHINF 3,3x3,4	210

GENERAL VIEW

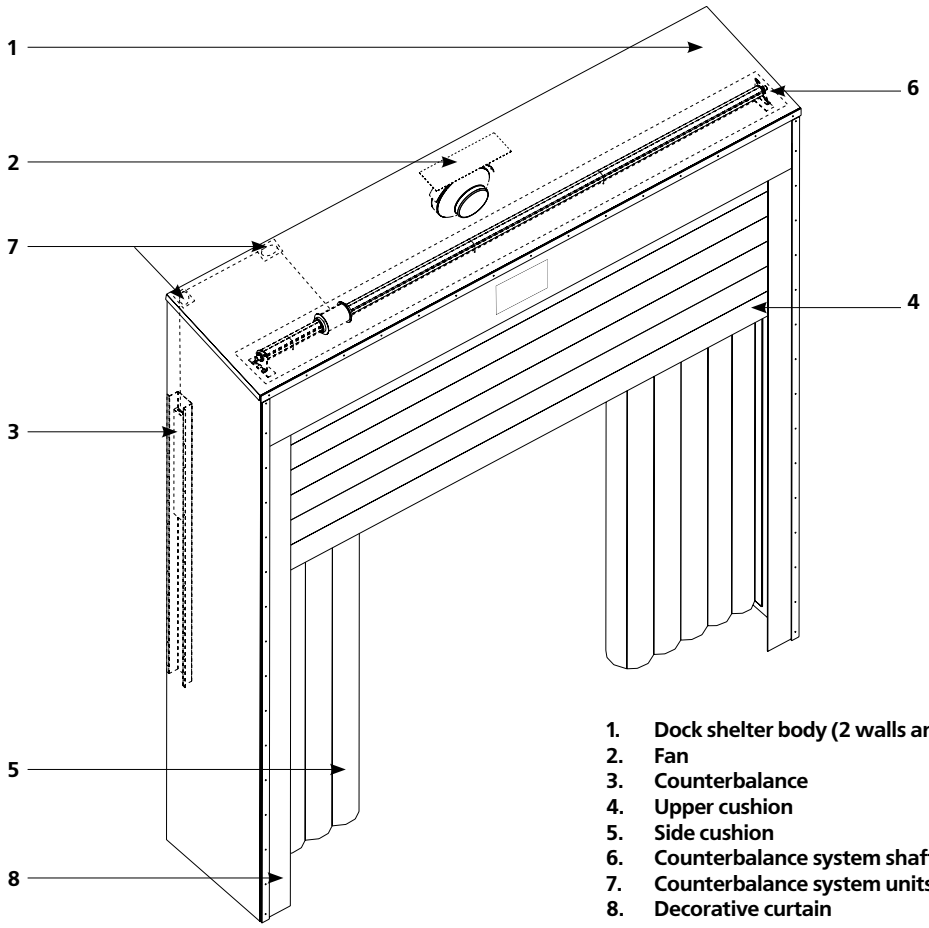

1. **Dock shelter body (2 walls and roof)**
2. **Fan**
3. **Counterbalance**
4. **Upper cushion**
5. **Side cushion**
6. **Counterbalance system shaft**
7. **Counterbalance system units**
8. **Decorative curtain**

DESIGN

DSHINF dock shelter consists of a two walls and roof, inflatable cushions, fan and decorative curtains. The side walls and roof are assembled with inflatable cushions. The panel of upper cushion cable winding system and a counter balance unit, are installed separately. 40 mm thick sandwich panel is used as a material of walls and roof. The dock shelter is operated by a switch or dock leveller control unit.

PACKAGE

	Standard	Option
Dock shelter depth mm	800	other
Upper cushion extension mm	900	1200
Panel colour	Signal white (RAL9003)	other
Profile colour	White aluminium (RAL9006)	other
Colour of decorative curtains and inflatable cushions	black	
Operation	switch	dock leveller control unit

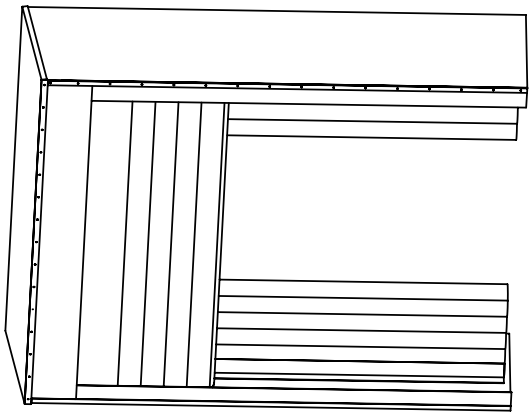

Dock shelter dimensions

Article of dock shelter	W, mm	W1, mm	W2, mm	H, mm	H1, mm	H2, mm	C, mm
DSHINF3,8x3,6	3610	1880	3190	3800	2250	3290	800
DSHINF4,9x3,6	3610	1880	3190	4900	3360	4390	800
DSHINF3,3x3,4	3410	1680	2990	3300	1360	2790	800

For more detailed information, please contact DoorHan company.

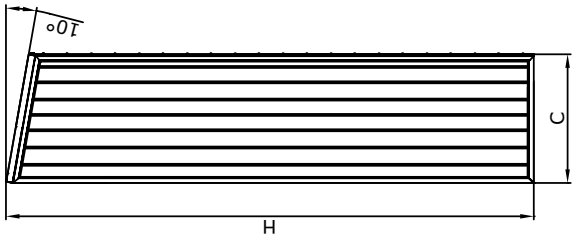

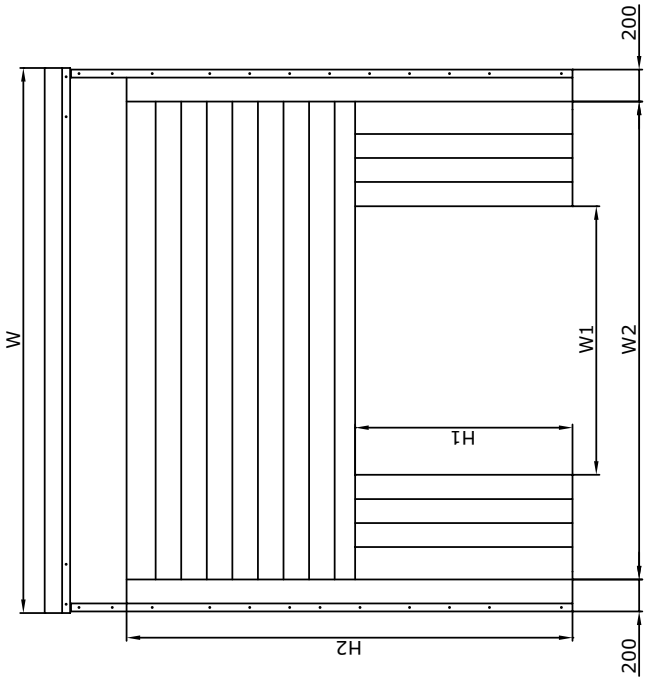

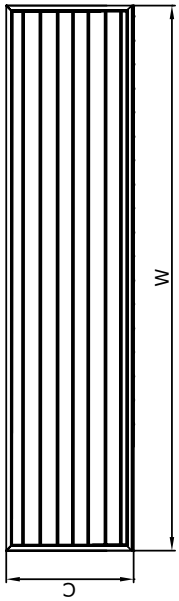

This drawing of inflatable dock shelter with width 3400 mm and height 3300 mm (article DSHINF3,3x3,4)

DSHINF Model dock shelter

Inflatable dock shelter

1:1

DoorHan-Docking systems

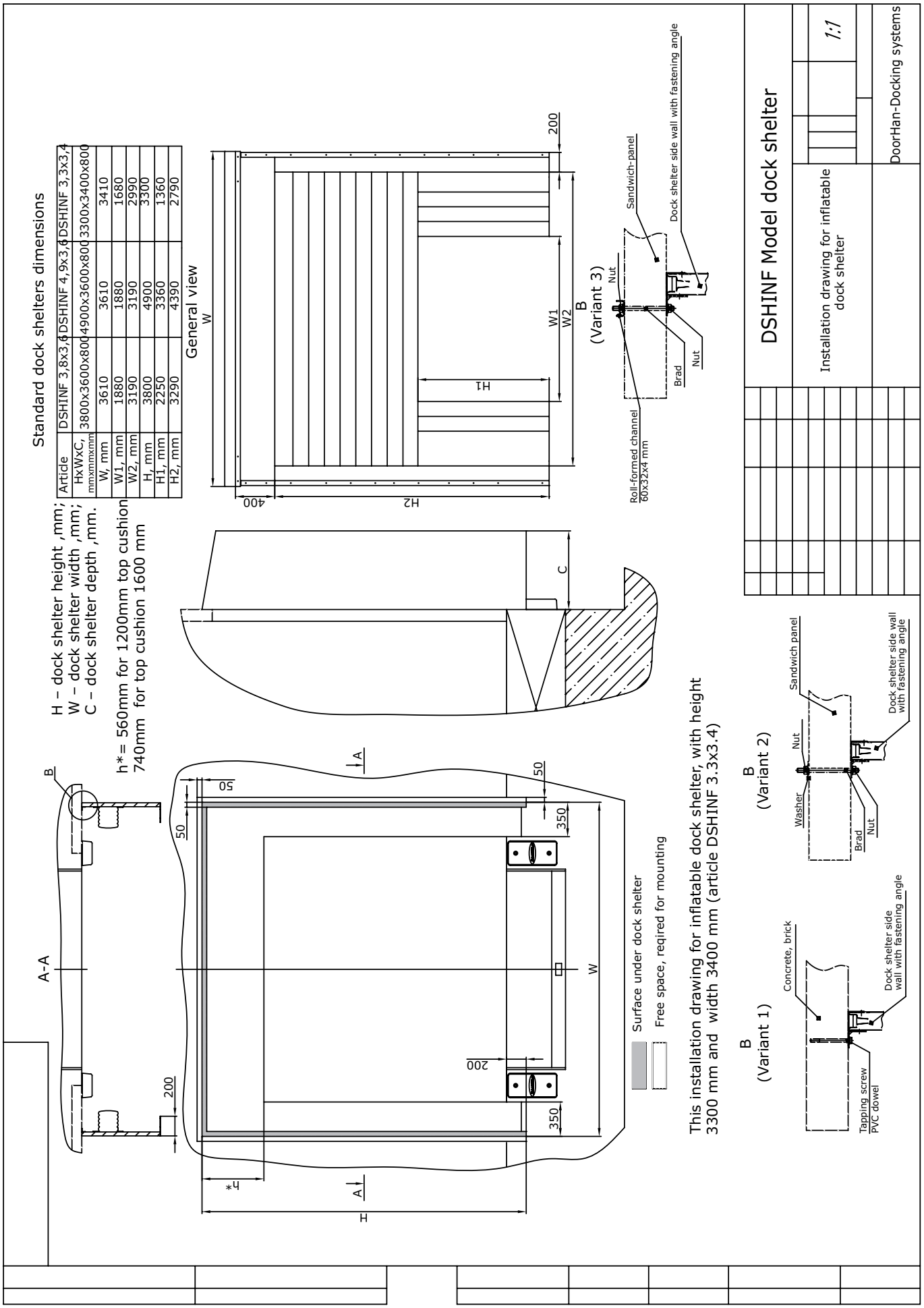
Standard dock shelters dimensions
Article
HxWxC, mmxmmxmm
W, mm
W1, mm
W2, mm
H, mm
H1, mm
H2, mm
DSHINF 3,8x3,6
3800x3600x800
3610
1880
3190
3800
2250
3290
DSHINF 4,9x3,6
4900x3600x800
3610
1880
3190
4900
3360
4390
DSHINF 3,3x3,4
3300x3400x800
3410
1680
2990
3300
1360
2790
General view
W
H1
W1
W2
H2
400
200
B
(Variant 3)
Sandwich-panel
Dock shelter side wall with fastening angle
Nut
Brad
Nut
Roll-formed channel 60x32x4 mm
C
H – dock shelter height ,mm;
W – dock shelter width ,mm;
C – dock shelter depth ,mm.
h*= 560mm for 1200mm top cushion
740mm for top cushion 1600 mm
A-A
B
A
50
50
50
350
350
200
200
W
H
h*
Surface under dock shelter
Free space, reqired for mounting
This installation drawing for inflatable dock shelter, with height 3300 mm and width 3400 mm (article DSHINF 3.3x3.4)
B
(Variant 2)
Sandwich panel
Nut
Washer
Brad
Nut
Dock shelter side wall with fastening angle
B
(Variant 1)
Concrete, brick
Tapping screw
PVC dowel
Dock shelter side wall with fastening angle
DSHINF Model dock shelter
Installation drawing for inflatable dock shelter
1:1
DoorHan-Docking systems

DOORHAN EXTERNAL FRAMES

EXTERNAL FRAMES OF FP (90/60/45) SERIES

FP (90/60/45) external frames are installed in the dock or in front of the opening as stand–alone unit, including a dock leveller. One of the main advantages of external frames is possibility to modernize them without changing Design of the main building. External frames can be used for loading/unloading in the places, where trucks can not be parked transversely to the building. All types of dock levellers can be used with external frames. External frames are available with 3 angles – 90⁰, 60⁰, 45⁰. Since the external frames are preassembled the installation time is quite short.

Main advantages:

- good solution in areas where there is restricted space;
- modernization without making change in Design of the main building;
- easy installation.

PERFOMANCE	
Working temperature	от -35 до +70 °C
Class of surface cleaning before painting	Sa 2

WEIGHT OF EXTERNAL FRAMES	Dock leveller length					
	2000 mm	2500 mm	3000 mm	3500 mm	4000 mm	4500 mm
External frame 45˚ kg	1204	1505	1561	1664	1751	1819
External frame 60˚ kg	1016	1270	1330	1435	1524	1593
External frame 90˚ kg	636	796	861	971	1064	1135

This table is given for external frames with general width 3000 mm for 2000 mm width dock leveller with hinged lip , without taking into account its weight.

For more detailed information, please contact DoorHan company.

STANDARD INSTALLATION DIAGRAMS FOR EXTERNAL FRAMES

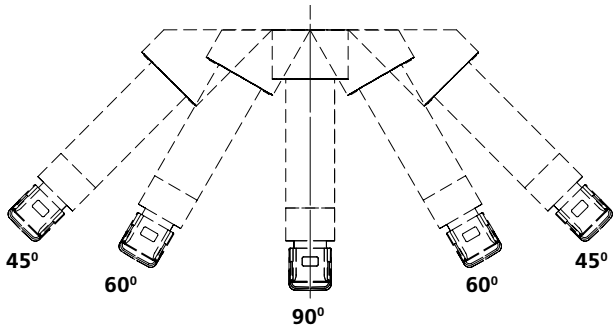

GENERAL VIEW

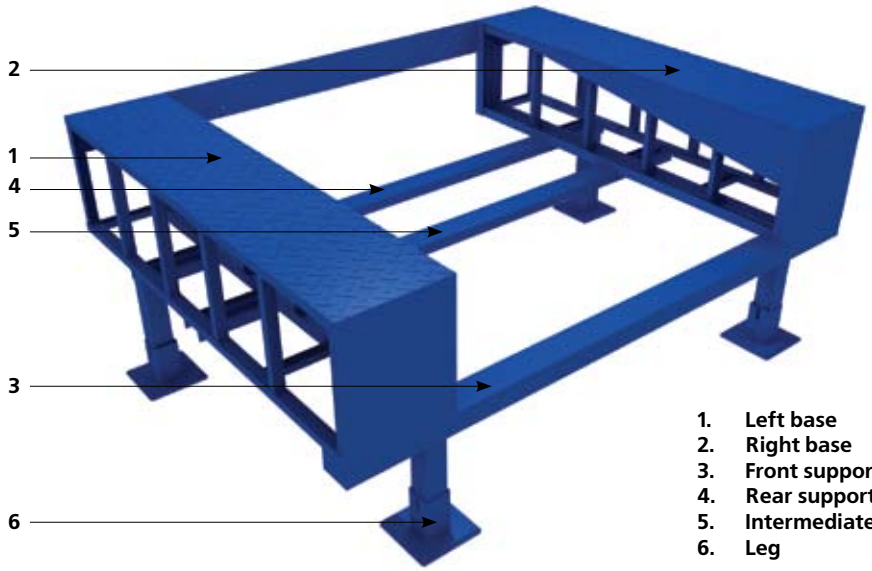

1. **Left base**
2. **Right base**
3. **Front support beam**
4. **Rear support beam**
5. **Intermediate support beams**
6. **Leg**

DESIGN

FP 90/60/45 external frame consists of 2 bases, rear and front support beams, an intermediate beam (depending on the design) and legs. The slanted frame has a triangle with angle 90°, 60° or 45° in the rear part.

PACKAGE		
	Standard	**Option**
Dimensions	Depending on dock leveller dimensions	Other upon request
Angle	90°, 60° or 45°	Other upon request
Colour*	Signal blue (RAL5005)	other

*** Powder coating with preliminary shot blasting.**

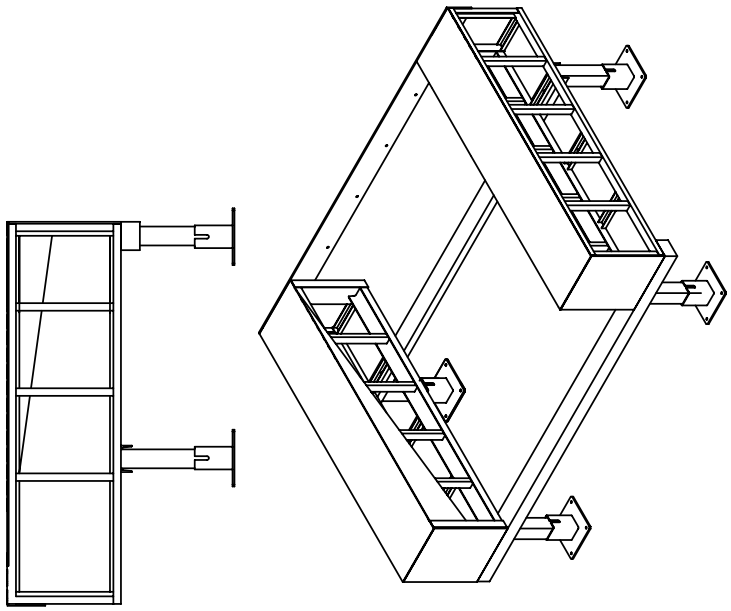

1. *- Reference dimesion
2.For more detailed information, please contact DoorHan company.

FPI90 Model external frame	
External straight frame (90) for dock leveller with hinged lip of embedded type	1:1
	DoorHan-Docking systems

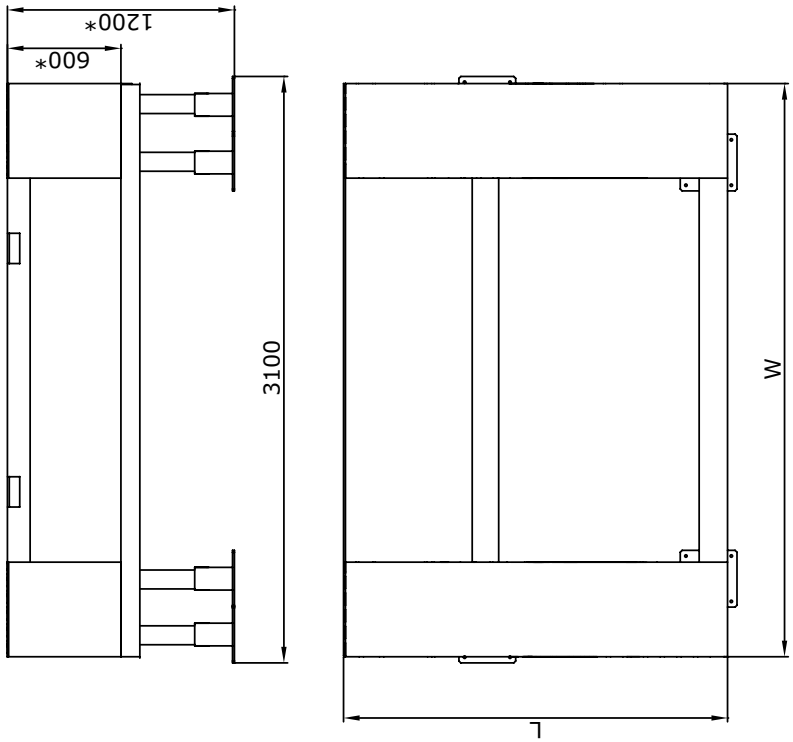

L = length of dock leveller + 30,mm;
W = 2830, 3030, 3230, 3430,mm.

This drawing of external straight frame (90°)
(article FPI90-2000) for dock leveller with hinged lip
of embedded type with width 2000 mm,
lenght 2000mm and height 600 mm (article DLHHI2020-(06)E).

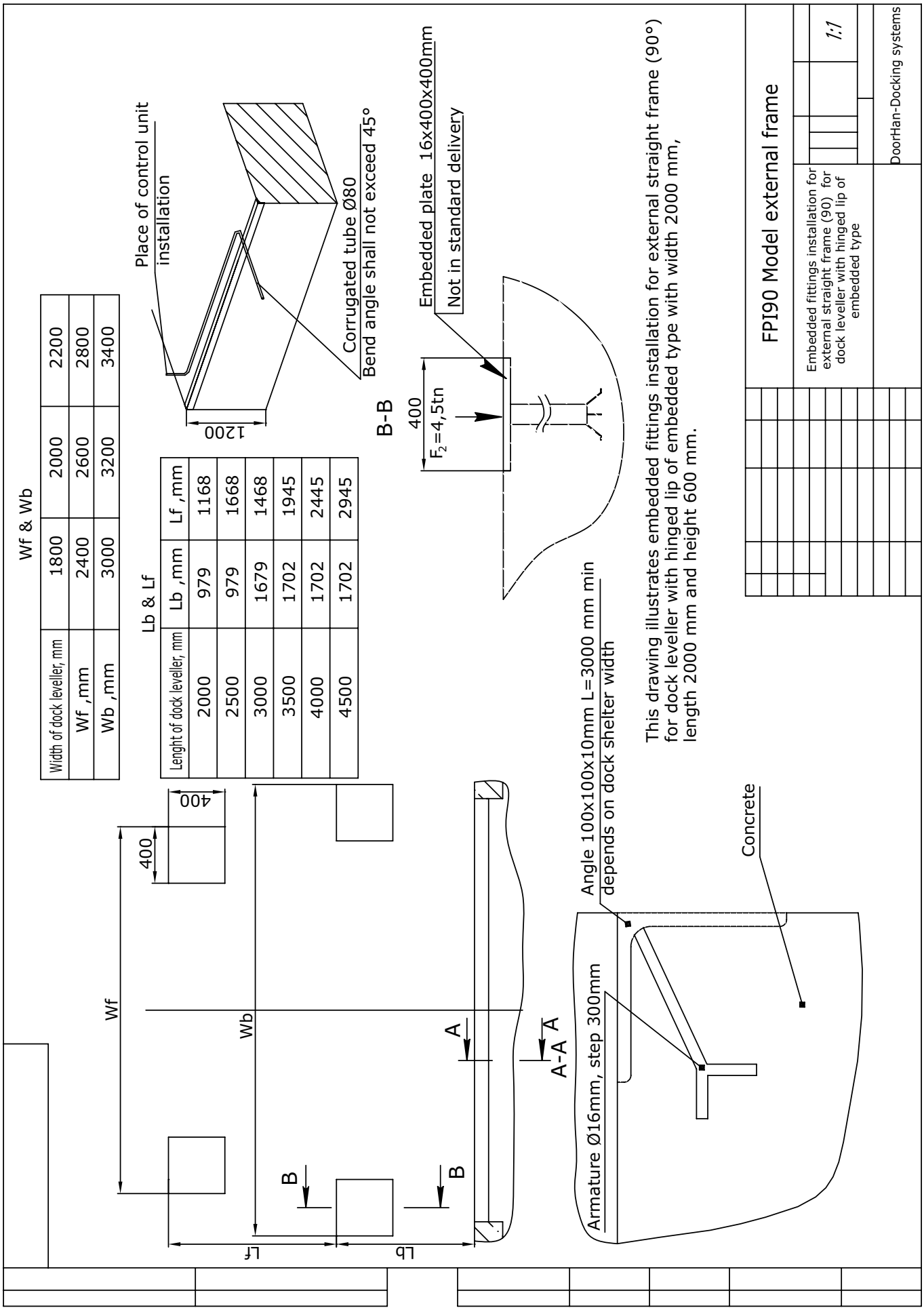
Wf & Wb
Width of dock leveller, mm 1800 2000 2200
Wf ,mm 2400 2600 2800
Wb ,mm 3000 3200 3400
Lb & Lf
Lenght of dock leveller, mm Lb ,mm Lf ,mm
2000 979 1168
2500 979 1668
3000 1679 1468
3500 1702 1945
4000 1702 2445
4500 1702 2945
Place of control unit installation
Corrugated tube Ø80
Bend angle shall not exceed 45°
1200
B-B
400
F2=4,5tn
Embedded plate 16x400x400mm
Not in standard delivery
This drawing illustrates embedded fittings installation for external straight frame (90°) for dock leveller with hinged lip of embedded type with width 2000 mm, length 2000 mm and height 600 mm.
Angle 100x100x10mm L=3000 mm min depends on dock shelter width
Concrete
Armature Ø16mm, step 300mm
A-A
Wf
Wb
Lf
Lb
FPI90 Model external frame
Embedded fittings installation for external straight frame (90) for dock leveller with hinged lip of embedded type
1:1
DoorHan-Docking systems

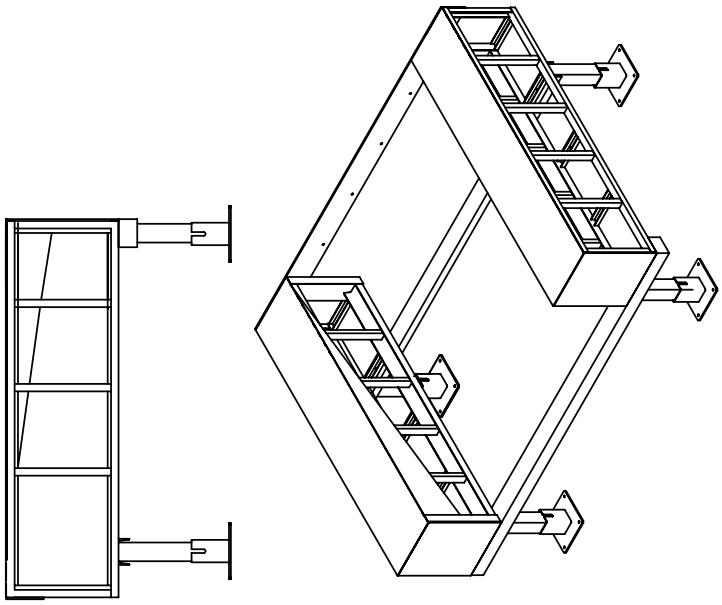

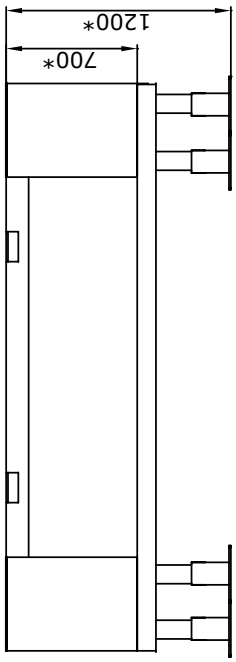

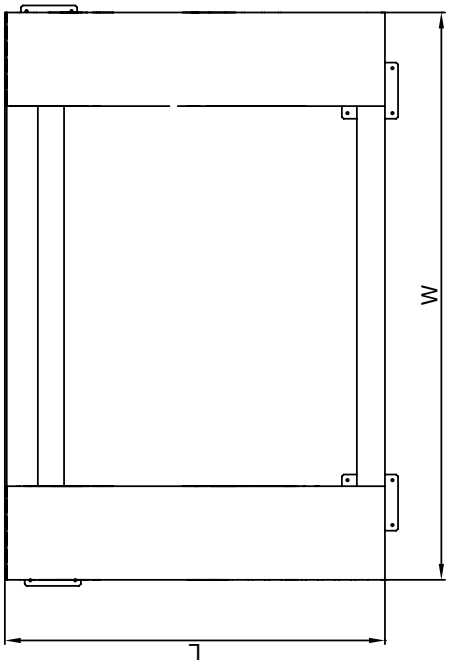

1. *- Reference dimesion
2.For more detailed information, please contact DoorHan company.

L = length of dock leveller + 30,mm;
W = 2830, 3030, 3230, 3430 ,mm.

This drawing of external straight frame (90°)
(article FPVI90-2000) for dock leveler with sliding lip
with width 2000 mm, lenght 2000mm and height 700 mm

FPVI90 Model external frame	
External straight frame (90°) for dock leveller with sliding lip of embedded type	1:1
	DoorHan-Docking systems

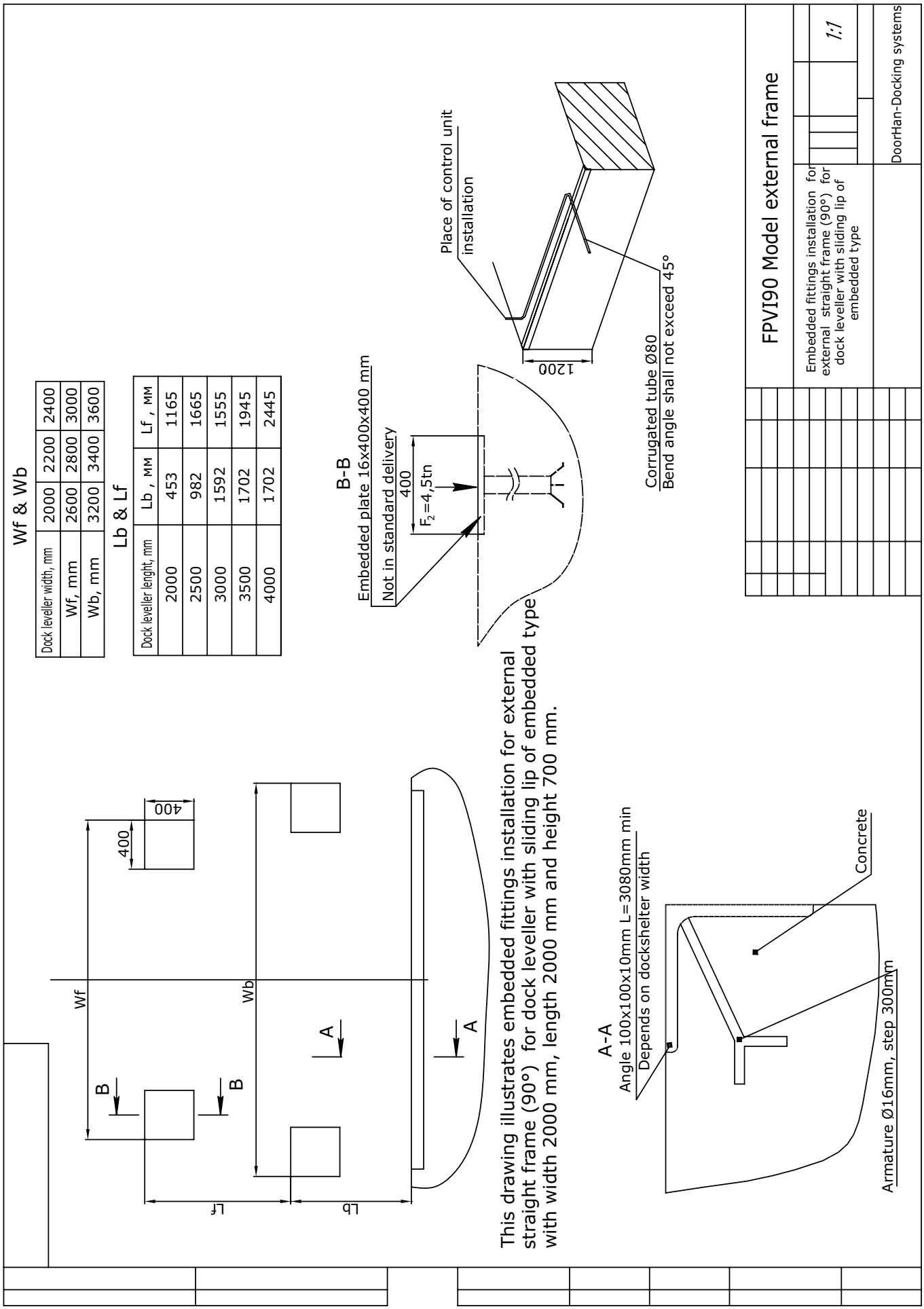
Wf & Wb
Dock leveller width, mm 2000 2200 2400
Wf, mm 2600 2800 3000
Wb, mm 3200 3400 3600
Lb & Lf
Dock leveller lenght, mm Lb , мм Lf , мм
2000 453 1165
2500 982 1665
3000 1592 1555
3500 1702 1945
4000 1702 2445
B-B
Embedded plate 16x400x400 mm
Not in standard delivery
400
F2=4,5tn
Place of control unit installation
1200
Corrugated tube Ø80
Bend angle shall not exceed 45°
FPVI90 Model external frame
Embedded fittings installation for external straight frame (90°) for dock leveller with sliding lip of embedded type
1:1
DoorHan-Docking systems
400
400
Wf
Wb
B
B
A
A
Lf
Lb
This drawing illustrates embedded fittings installation for external straight frame (90°) for dock leveller with sliding lip of embedded type with width 2000 mm, length 2000 mm and height 700 mm.
A-A
Angle 100x100x10mm L=3080mm min
Depends on dockshelter width
Concrete
Armature Ø16mm, step 300mm

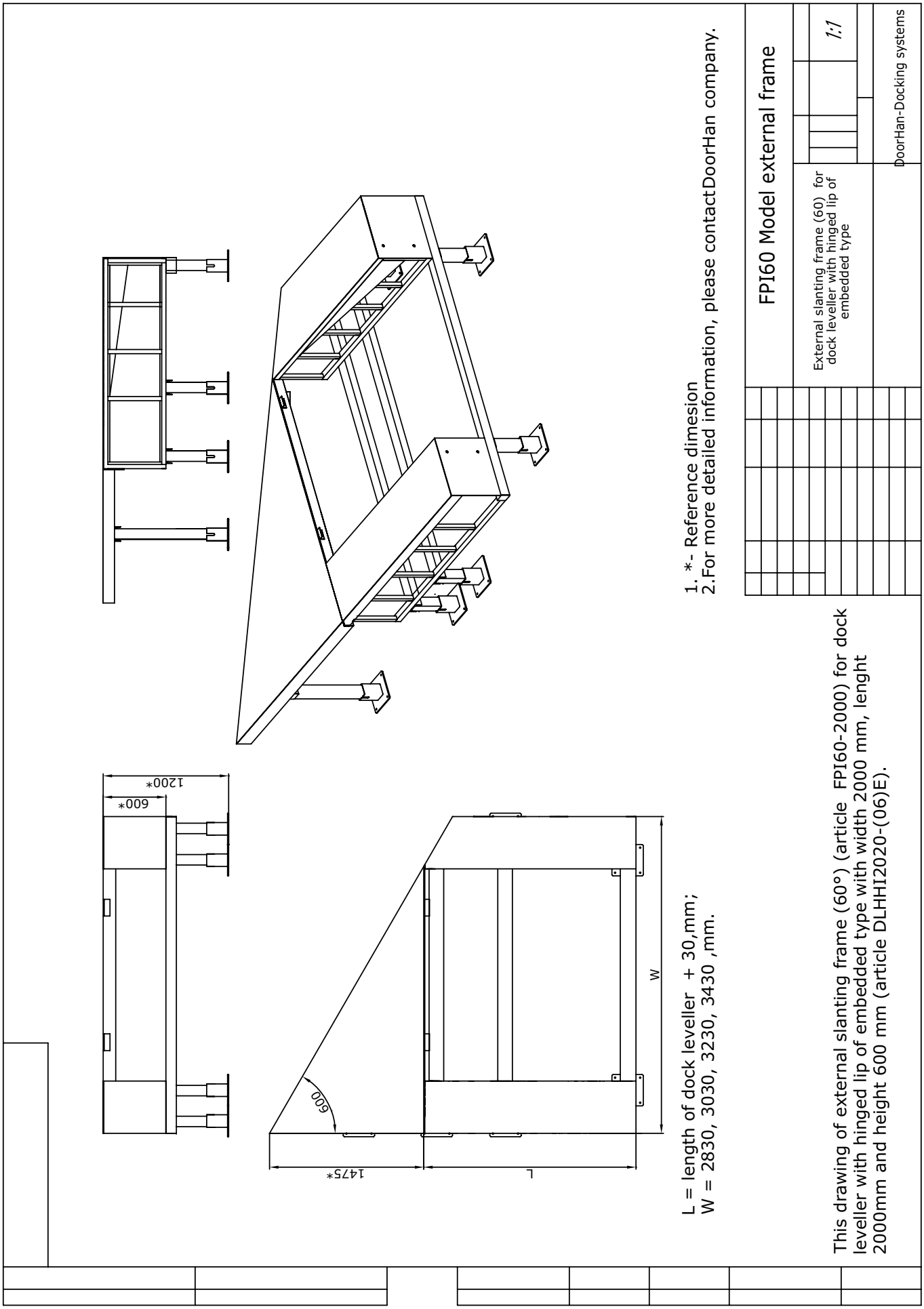
1200*
600*
600
1475*
L
W
1. *- Reference dimesion
2.For more detailed information, please contactDoorHan company.
L = length of dock leveller + 30,mm;
W = 2830, 3030, 3230, 3430 ,mm.
This drawing of external slanting frame (60°) (article FPI60-2000) for dock leveller with hinged lip of embedded type with width 2000 mm, lenght 2000mm and height 600 mm (article DLHHI2020-(06)E).
FPI60 Model external frame
External slanting frame (60) for dock leveller with hinged lip of embedded type
1:1
DoorHan-Docking systems

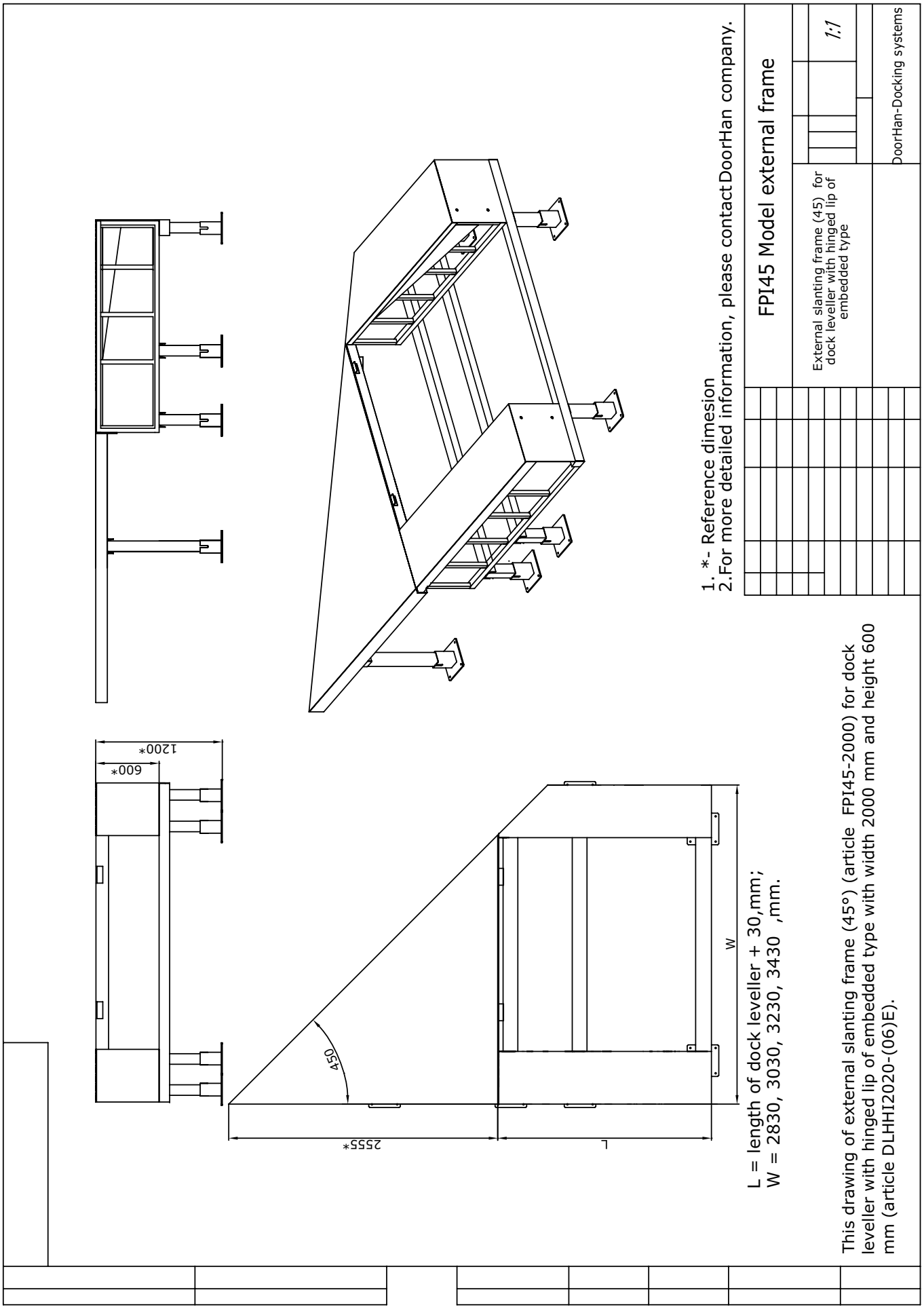
1200*
600*
2555*
450
L
W
1. *- Reference dimesion
2.For more detailed information, please contact DoorHan company.
FPI45 Model external frame
External slanting frame (45) for dock leveller with hinged lip of embedded type
1:1
DoorHan-Docking systems
L = length of dock leveller + 30,mm;
W = 2830, 3030, 3230, 3430 ,mm.
This drawing of external slanting frame (45°) (article FPI45-2000) for dock leveller with hinged lip of embedded type with width 2000 mm and height 600 mm (article DLHHI2020-(06)E).

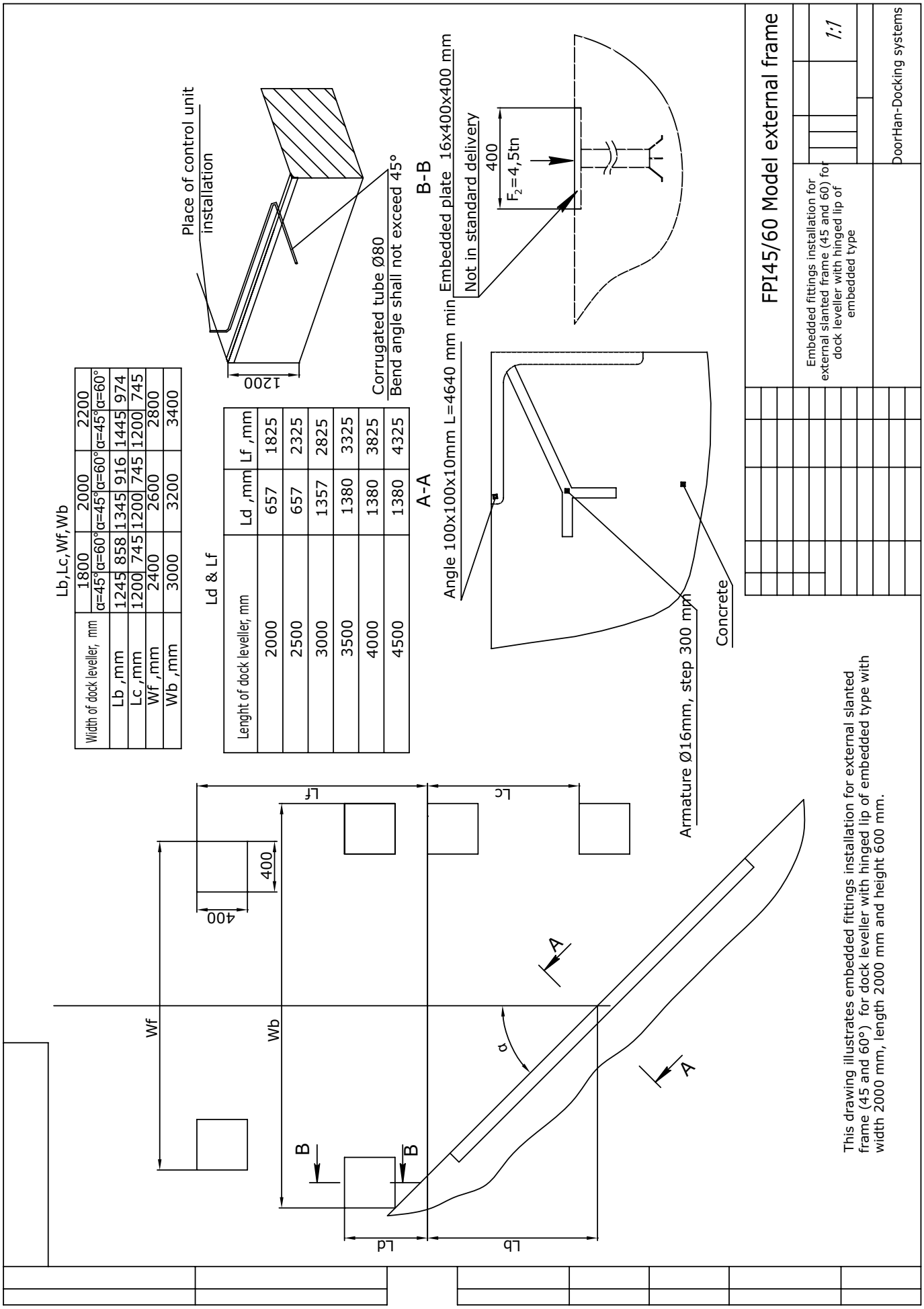

Lb,Lc,Wf,Wb

Width of dock leveller, mm	1800		2000		2200	
	α=45°	α=60°	α=45°	α=60°	α=45°	α=60°
Lb ,mm	1245	858	1345	916	1445	974
Lc ,mm	1200	745	1200	745	1200	745
Wf ,mm	2400		2600		2800	
Wb ,mm	3000		3200		3400	

Ld & Lf

Lenght of dock leveller, mm	Ld ,mm	Lf ,mm
2000	657	1825
2500	657	2325
3000	1357	2825
3500	1380	3325
4000	1380	3825
4500	1380	4325

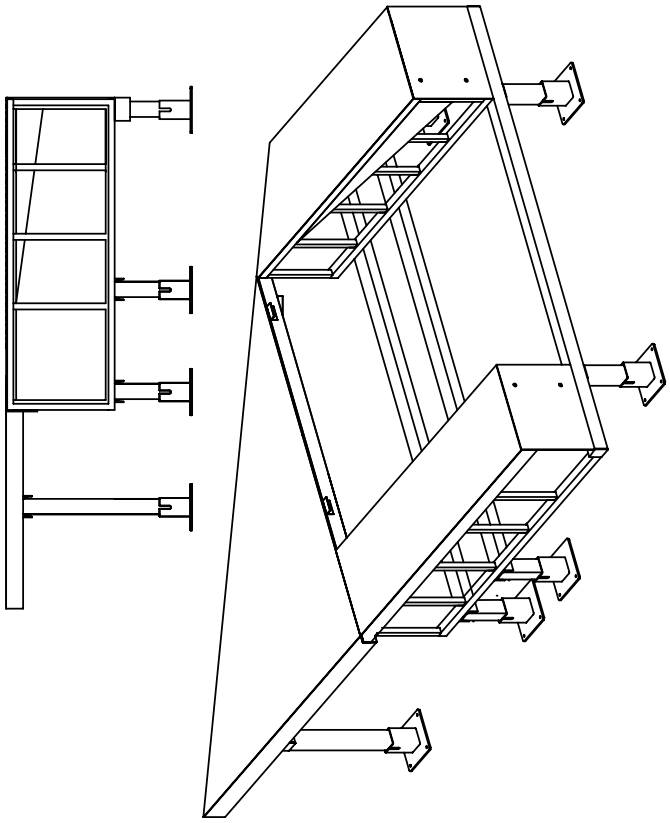

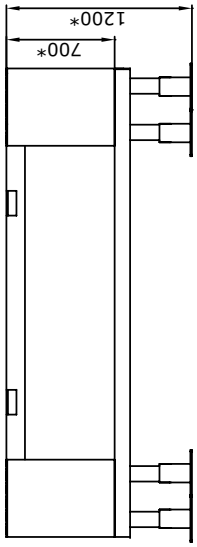

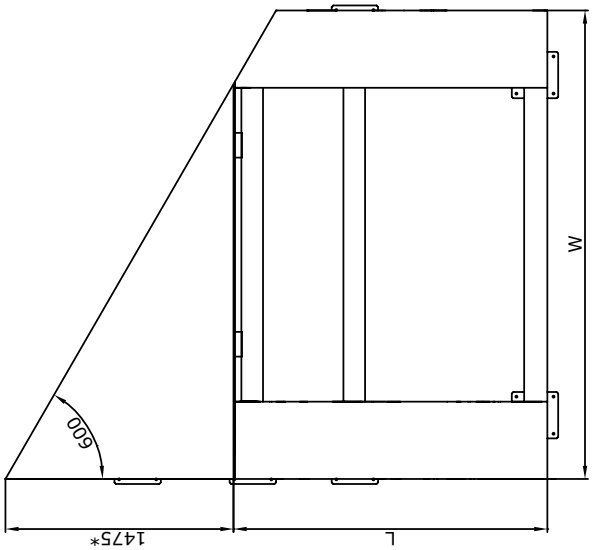

L= length of dock leveller + 30,mm;
W = 2830, 3030, 3230, 3430 , mm.

1. *- Reference dimesion
2. For more detailed information, please contact DoorHan company.

FPVI60 Model external frame	1:1
External slanted frame (60) for dock leveller with sliding lip of embedded type	Doorhan-Docking systems

This drawing of external slanted frame (60°) (article FPVI60-2000) for dock leveller with sliding lip of embedded type with width 2000 mm and height 700 mm

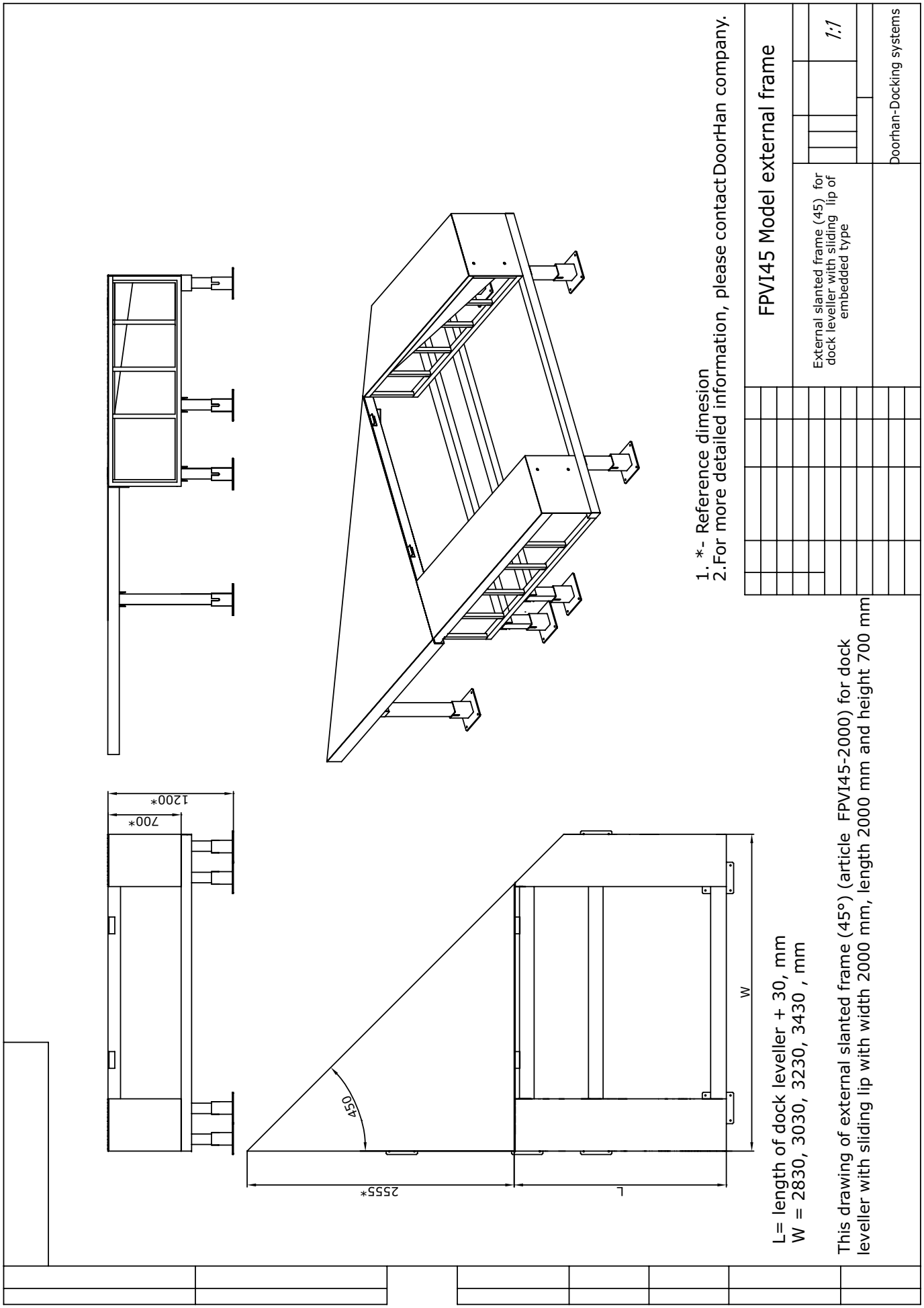
1. *- Reference dimesion
2.For more detailed information, please contact DoorHan company.
FPVI45 Model external frame
External slanted frame (45) for dock leveller with sliding lip of embedded type
1:1
Doorhan-Docking systems
1200*
700*
450
2555*
L
W
L= length of dock leveller + 30, mm
W = 2830, 3030, 3230, 3430 , mm
This drawing of external slanted frame (45°) (article FPVI45-2000) for dock leveller with sliding lip with width 2000 mm, length 2000 mm and height 700 mm

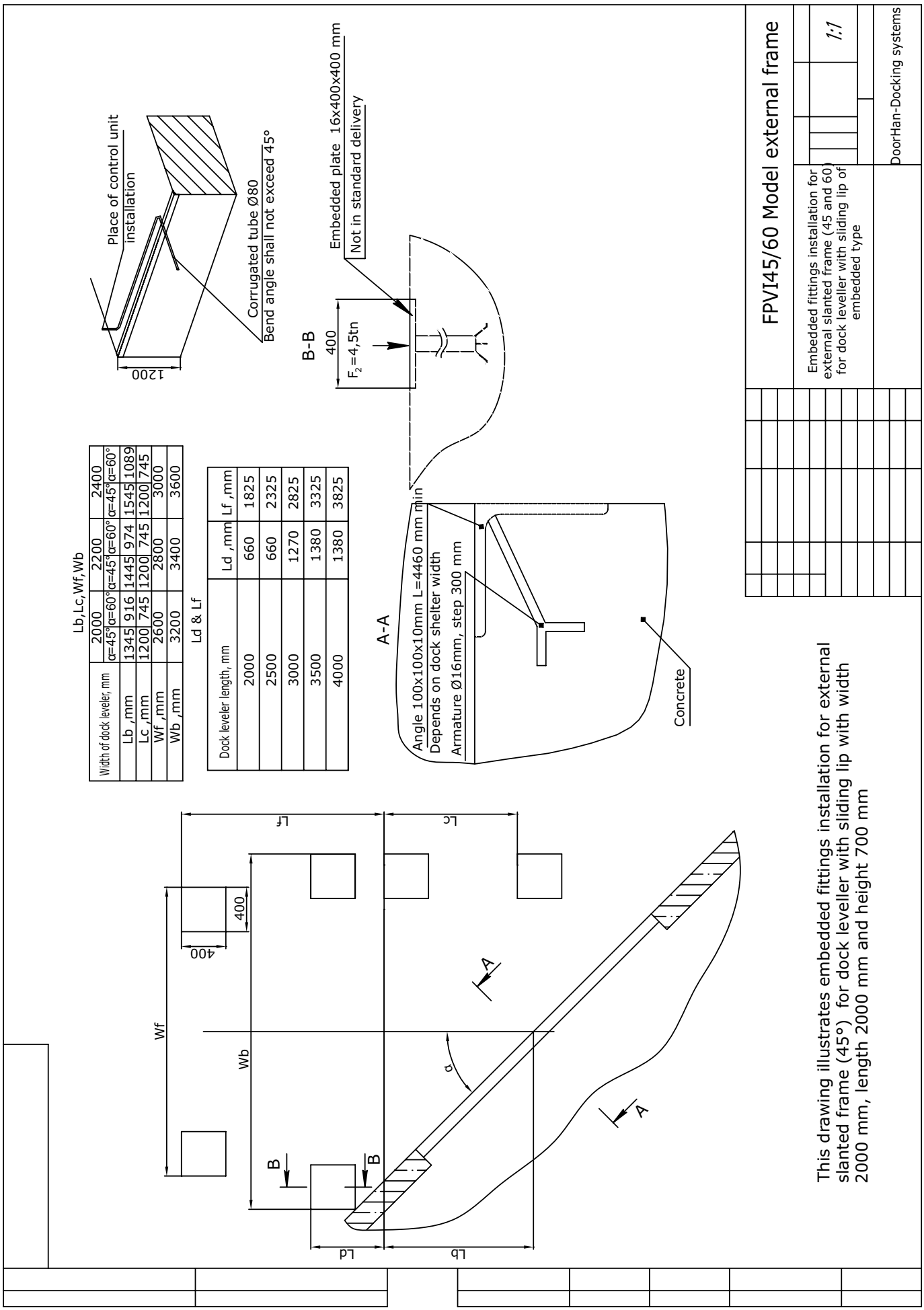

Lb,Lc,Wf,Wb

Width of dock leveler, mm	2000		2200		2400	
	α=45°	α=60°	α=45°	α=60°	α=45°	α=60°
Lb ,mm	1345	916	1445	974	1545	1089
Lc ,mm	1200	745	1200	745	1200	745
Wf ,mm	2600		2800		3000	
Wb ,mm	3200		3400		3600	

Ld & Lf

Dock leveler length, mm	Ld ,mm	Lf ,mm
2000	660	1825
2500	660	2325
3000	1270	2825
3500	1380	3325
4000	1380	3825

DOORHAN DOCK HOUSES

GENERAL INFORMATION ABOUT DOORHAN DOCK HOUSES

The DoorHan dock house is a complex solution for installation of dock leveller and dock shelter (not included in dock house package) where there is restricted space. The dock houses allow to keep microclimate, save storage space and protect the goods from climatic factors since it is installed outside the building. One of the main advantages of dock houses is possibility to be upgraded without any major modifications to the Design of the building. The company DoorHan produces dock houses with 3 angles: 90˚, 60˚, 45˚. Dock houses with angles 60˚ and 45˚ are installed in the places, where front parking a truck is not possible. The dock houses of standard and light series are available.

Main Advantages:

- The thermal separation of the warehouse from the docking system keeps temperature in the premises;
- possibility to be upgraded without any major modifications of the building;
- quick installation;
- can be installed together with all combinations of dock levellers and dock shelters.

STANDARD DOCK HOUSES OF D/HOUSE.S(90/60/45) SERIES

Standard D.HOUS.S 90/60/45 dock houses are used with all types of dock levellers and dock shelters. The dock houses are pre-assembled in standard package. Cover strips, (are not included in standard package), ensure optimal sealing between the building and dock house.

SPECIFICATIONS	
Dock house	
Maximal wind load	0,65 KN/m²
Working temperature	from -35 to +70 °C
Roof	
Maximal snow load	3,0 KN/m²
Walls	
Sandwich panel thickness	40 mm
Frame	
Class of surface cleaning before painting	Sa 2

WEIGHT OF DOCK HOUSES	Dock leveller length					
	2000 mm	**2500 mm**	**3000 mm**	**3500 mm**	**4000 mm**	**4500 mm**
45˚ dock house weight kg	2392	2693	2915	3144	3374	3606
60˚ dock house weight kg	1977	2231	2457	2688	2920	3153
90˚ dock house weight kg	1280	1440	1671	1907	2143	2378

For more detailed information, please contact DoorHan company.

This table is given for dock houses for 2000mm width dock levellers with hinged lip and 3400mm dock shelter width, without taking into account its weight.

STANDARD INSTALLATION DIAGRAM FOR DOCK HOUSES

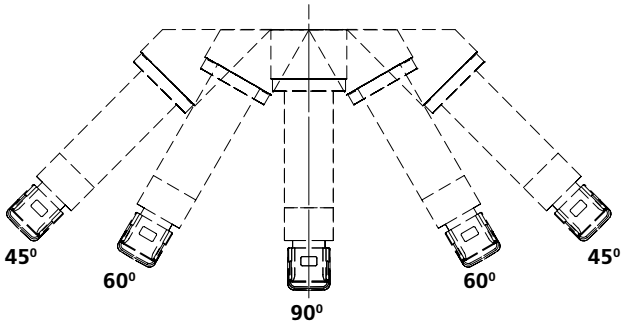

GENERAL VIEW

1. **Frame**
2. **Wall**
3. **Roof**
4. **Legs**
5. **Cover stripes (option)**

DESIGN

D.HOUS.S (90/60/45) dock house consists of a metal frame - base, side walls, which are made of sandwich panels, roof, legs and cover stripes (optionally). The roof has a slope 5° to the outside to enable rain water flow. The frame consists of 2 bases (left and right). On insides of the bases there is a gusset, which prevents personnel feet jamming during operation. The slanted dock house is equipped with a triangle 45° or 60° at the rear part and upper diamond sheet. The frame is joined with cross beams. The front beam is made of square tube and the rear beam (if present in design) is made of channel bar.

PACKAGE

	Standard	Option
Dimensions	Depend on dimensions of dock shelter and dock leveller	Other upon request
Angle	90/60/45°	Other upon request
Outside/inside wall colour	Signal white (RAL9003)	Other
Colour of frame	Signal blue (RAL5005)	Other
Wall edging profile colour	White aluminium (RAL 9006)	Other
Roof	Galvanized sheet C44	

*** Powder coating of frame with preliminary shot blasting.**

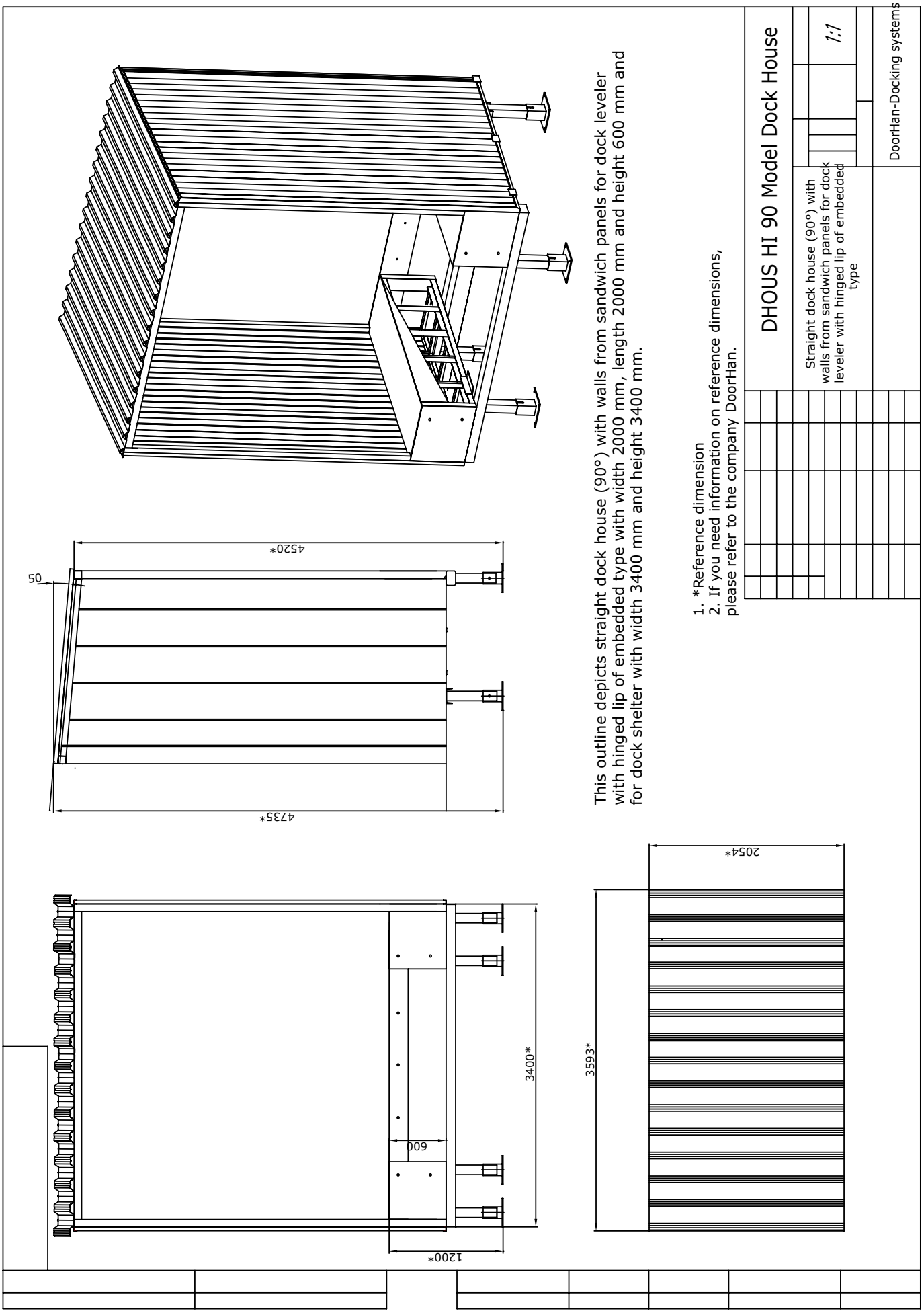
4520*
50
4735*
600
3400*
1200*
3593*
2054*
This outline depicts straight dock house (90°) with walls from sandwich panels for dock leveler with hinged lip of embedded type with width 2000 mm, length 2000 mm and height 600 mm and for dock shelter with width 3400 mm and height 3400 mm.
1. *Reference dimension
2. If you need information on reference dimensions, please refer to the company DoorHan.
DHOUS HI 90 Model Dock House
Straight dock house (90°) with walls from sandwich panels for dock leveler with hinged lip of embedded type
1:1
DoorHan-Docking systems

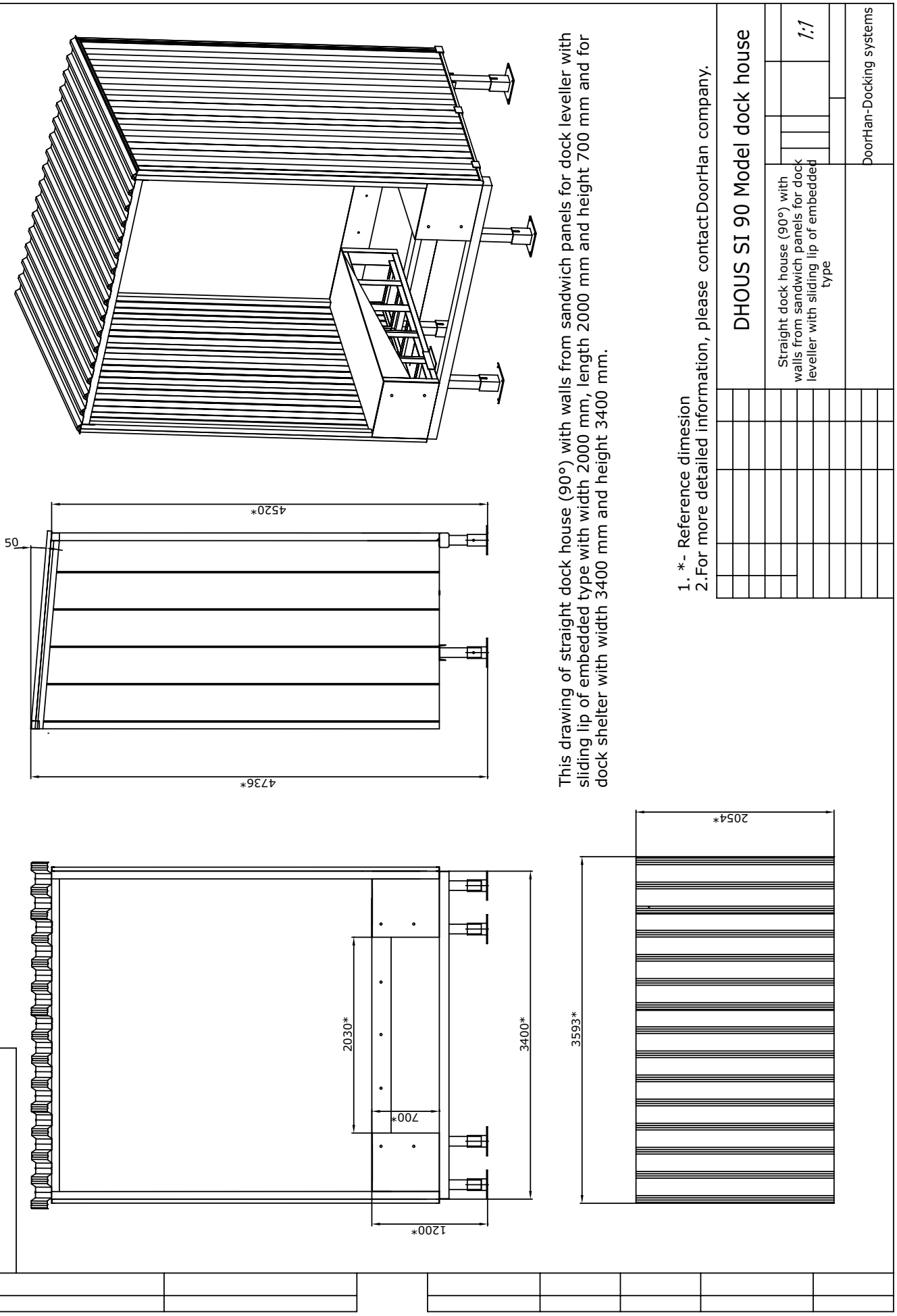
This drawing of straight dock house (90°) with walls from sandwich panels for dock leveller with sliding lip of embedded type with width 2000 mm, length 2000 mm and height 700 mm and for dock shelter with width 3400 mm and height 3400 mm.
1. *- Reference dimesion
2.For more detailed information, please contact DoorHan company.
DHOUS SI 90 Model dock house
Straight dock house (90°) with walls from sandwich panels for dock leveller with sliding lip of embedded type
1:1
DoorHan-Docking systems
4520*
50
4736*
2054*
2030*
3400*
3593*
700*
1200*

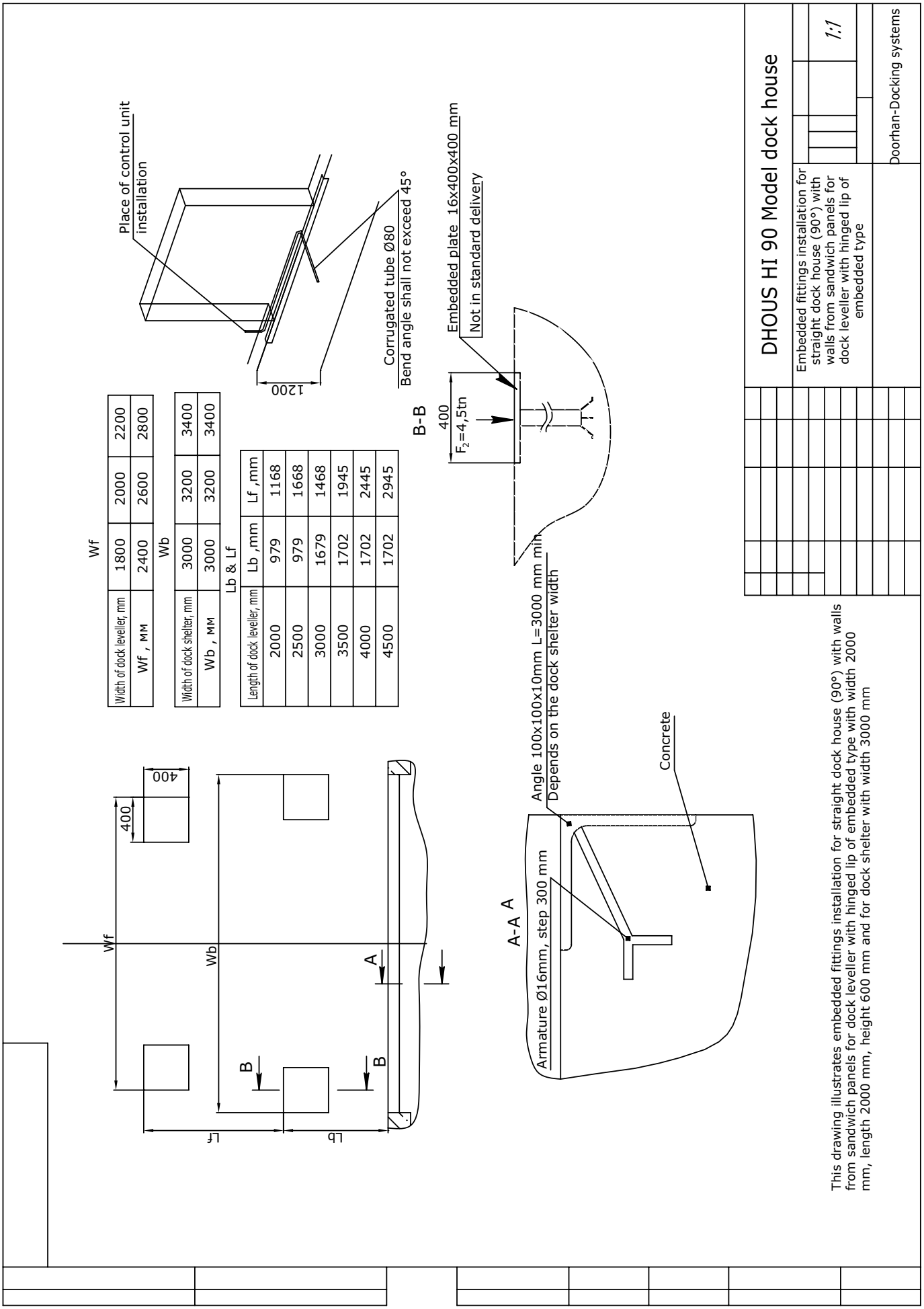
Place of control unit installation
1200
Corrugated tube Ø80
Bend angle shall not exceed 45°
Embedded plate 16x400x400 mm
Not in standard delivery
B-B
400
F2=4,5tn
Wf
Width of dock leveller, mm
Wf , мм
1800
2000
2200
2400
2600
2800
Wb
Width of dock shelter, mm
Wb , мм
3000
3200
3400
3000
3200
3400
Lb & Lf
Length of dock leveller, mm
Lb ,mm
Lf ,mm
2000 979 1168
2500 979 1668
3000 1679 1468
3500 1702 1945
4000 1702 2445
4500 1702 2945
400
400
Wf
Wb
A
B
B
Lf
Lb
Angle 100x100x10mm L=3000 mm min
Depends on the dock shelter width
Concrete
A-A
A
Armature Ø16mm, step 300 mm
DHOUS HI 90 Model dock house
Embedded fittings installation for straight dock house (90°) with walls from sandwich panels for dock leveller with hinged lip of embedded type
1:1
Doorhan-Docking systems
This drawing illustrates embedded fittings installation for straight dock house (90°) with walls from sandwich panels for dock leveller with hinged lip of embedded type with width 2000 mm, length 2000 mm, height 600 mm and for dock shelter with width 3000 mm

DRAWING OF EMBEDDED FITTINGS INSTALLATION FOR STRAIGHT DOCK HOUSE (90˚) WITH WALLS FROM SANDWICH PANELS FOR DOCK LEVELLER WITH TELESCOPIC LIP OF EMBEDDED TYPE

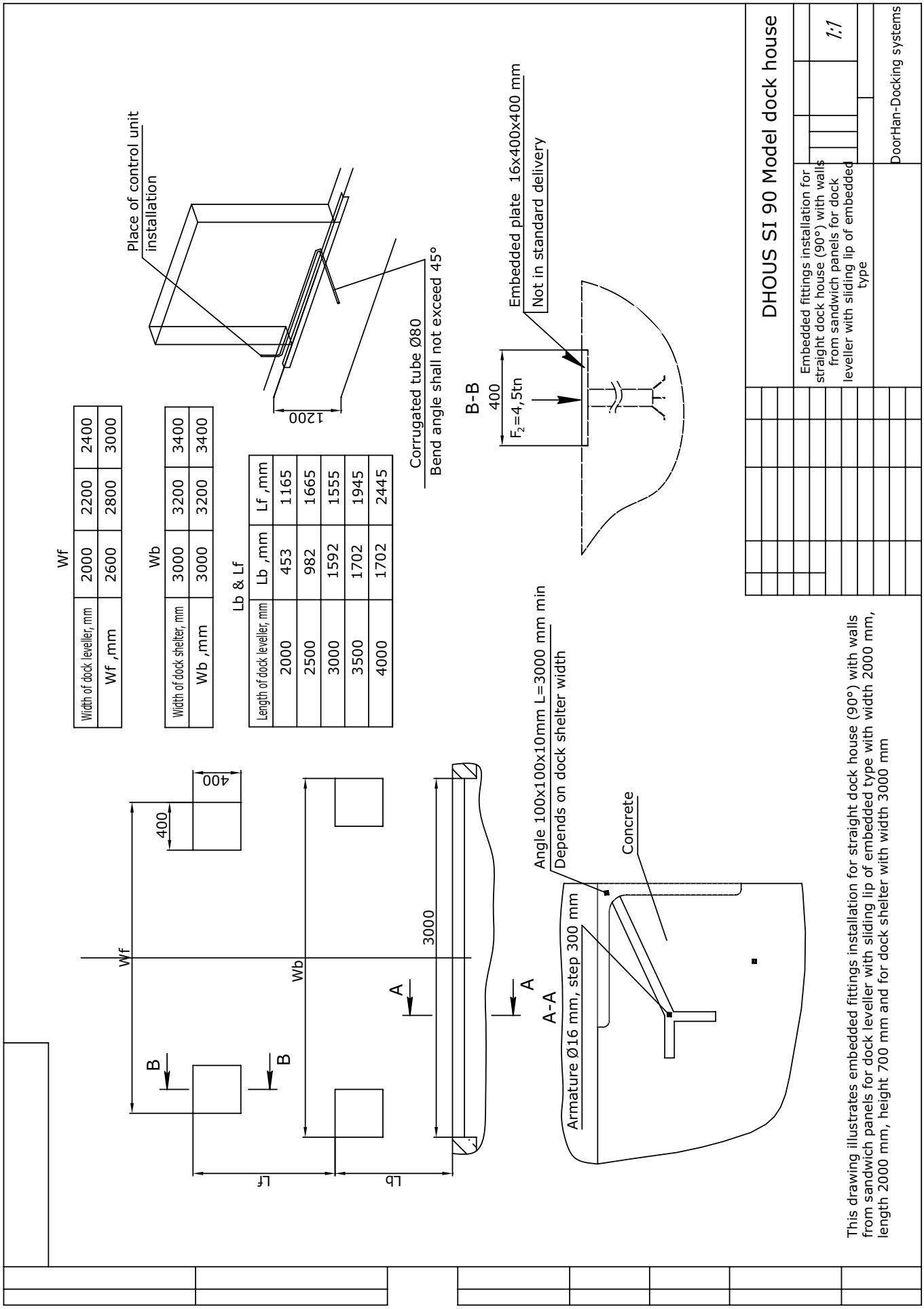

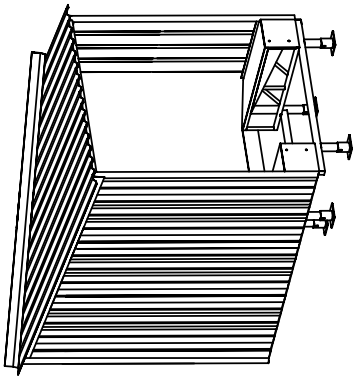

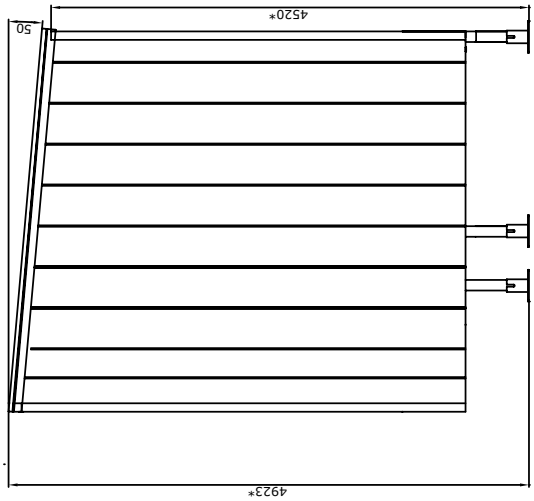

This drawing of slanting dock house (60°) with walls from sandwich panels for dock leveller with hinged lip of embedded type with width 2000 mm, length 2000 mm and height 600 mm and for dock shelter with width 3400 mm and height 3400 mm.

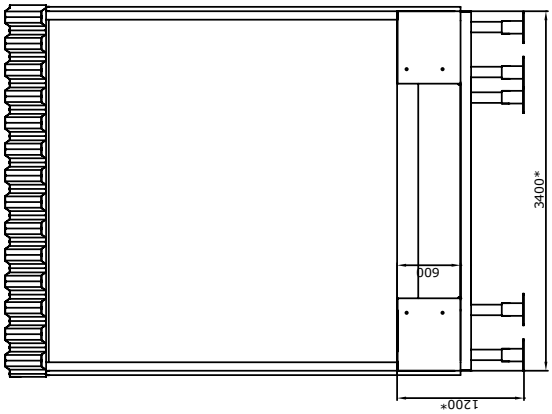

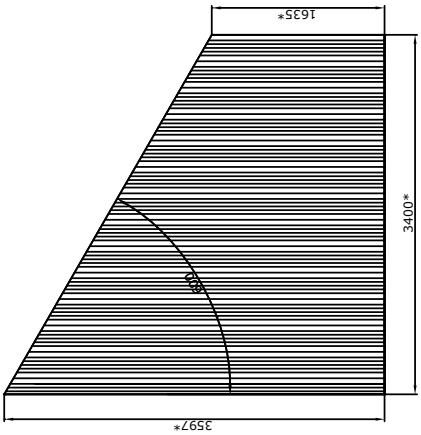

1. *- Reference dimesion
2.For more detailed information, please contact DoorHan company.

DHOUS HI 60 Model dock house	1:1
Slanting dock house (60) with walls from sandwich panels for dock leveller with hinged lip of embedded type	Doorhan-Docking systems

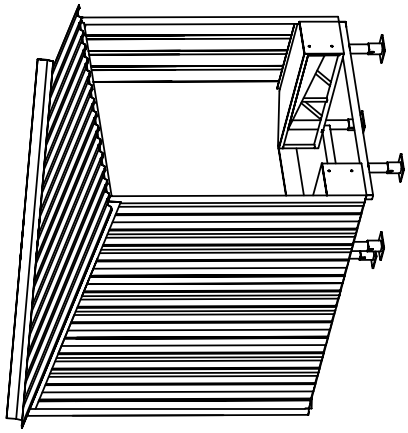

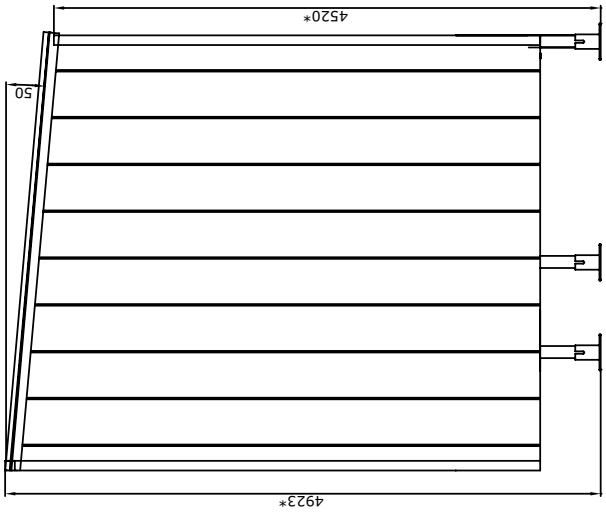

This drawing of slanting dock house (60°) with walls from sandwich panels for dock leveller with sliding lip of embedded type with width 2000 mm, length 2000 mm and height 700 mm and for dock shelter with width 3400 mm and height 3400 mm.

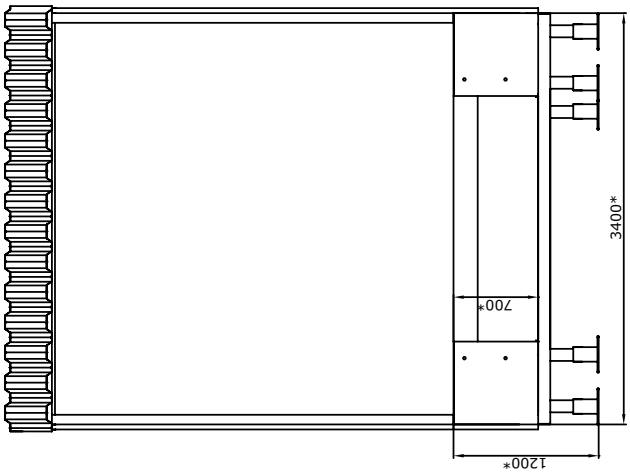

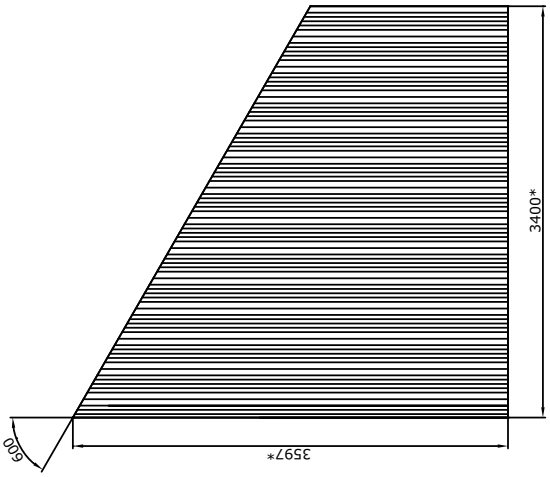

1. *- Reference dimension
2. For more detailed information, please contact DoorHan company.

DHOUS SI 60 Model dock house	1:1
Slanting dock house (60) with walls from sandwich panels for dock leveller with sliding lip of embedded type	DoorHan-Docking-systems

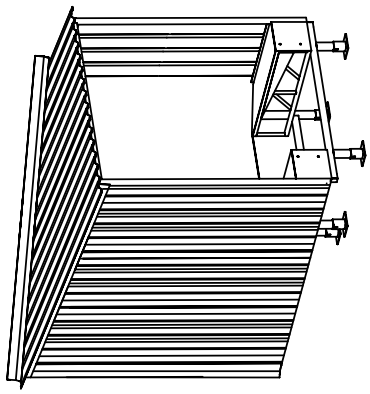

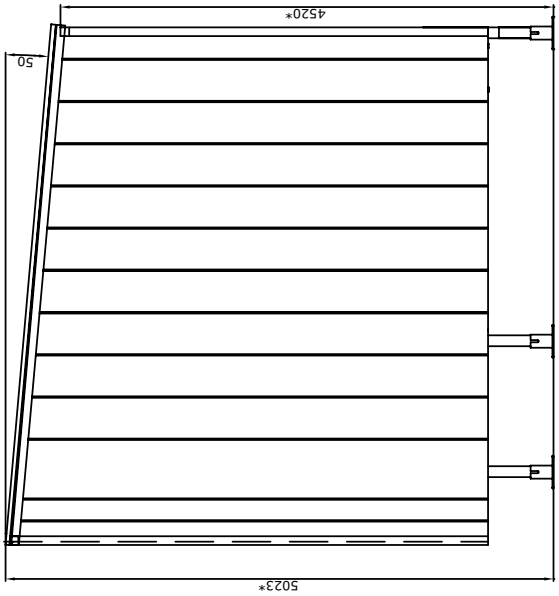

This drawing of slanting dock house (45°) with walls from sandwich panels for dock leveller with hinged lip of embedded type with width 2000 mm, length 2000 mm and height 600 mm and for dock shelter with width 3400 mm and height 3400 mm

1. *- Reference dimesion
2. For more detailed information, please contact DoorHan company.

DHOUS HI 45 Model dock house	1:1
Slanting dock house (45°) with walls from sandwich panels for dock leveller with hinged lip of embedded type	DoorHan-Docking system

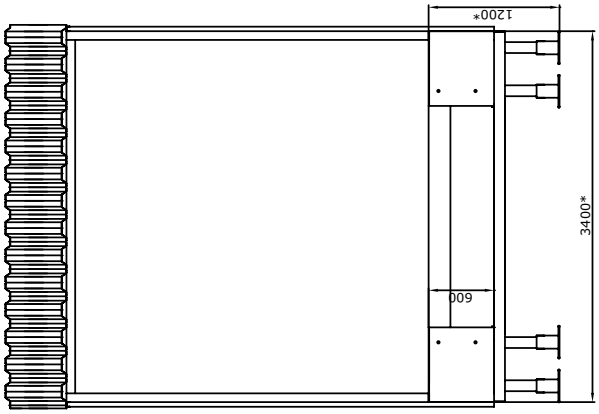

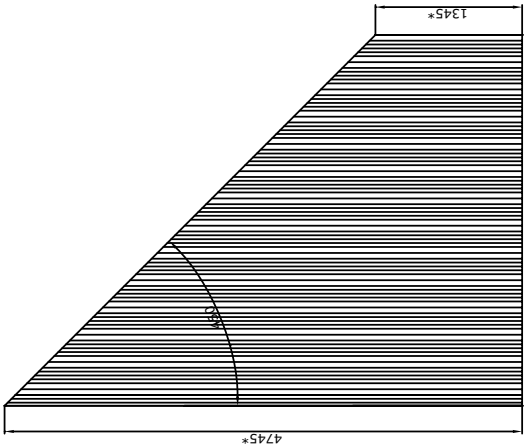

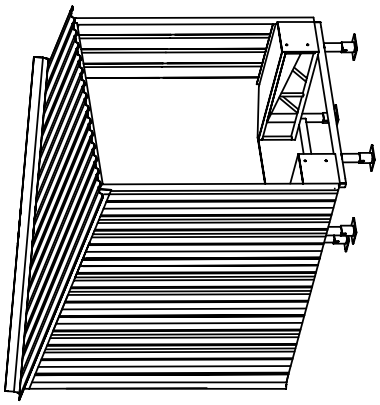

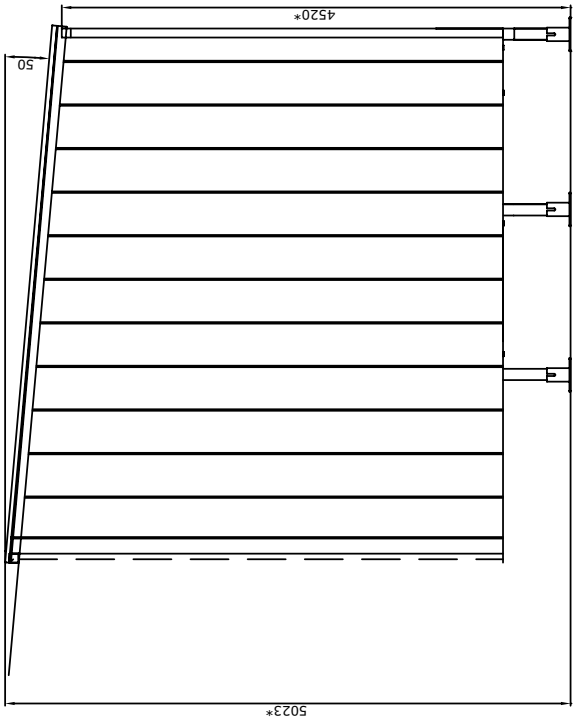

This drawing of slanting dock house (45°) with walls from sandwich panels for dock leveller with sliding lip of embedded type with width 2000 mm, length 2000 mm and height 700 mm and for dock shelter with width 3400 mm and height 3400 mm.

1. *- Reference dimension
2. For more detailed information, please contact DoorHan company.

DHOUS SI 45 Model dock house	1:1
Slanting dock house (45) with walls from sandwich panels for dock leveller with sliding lip of embedded type	DoorHan-Docking system

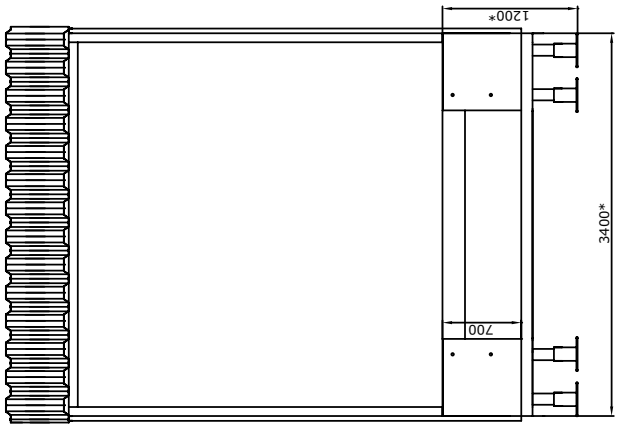

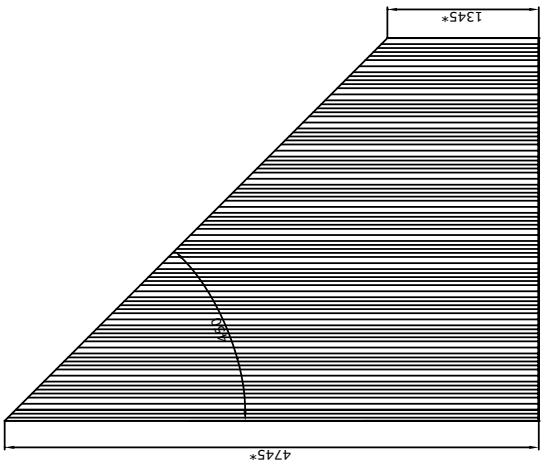

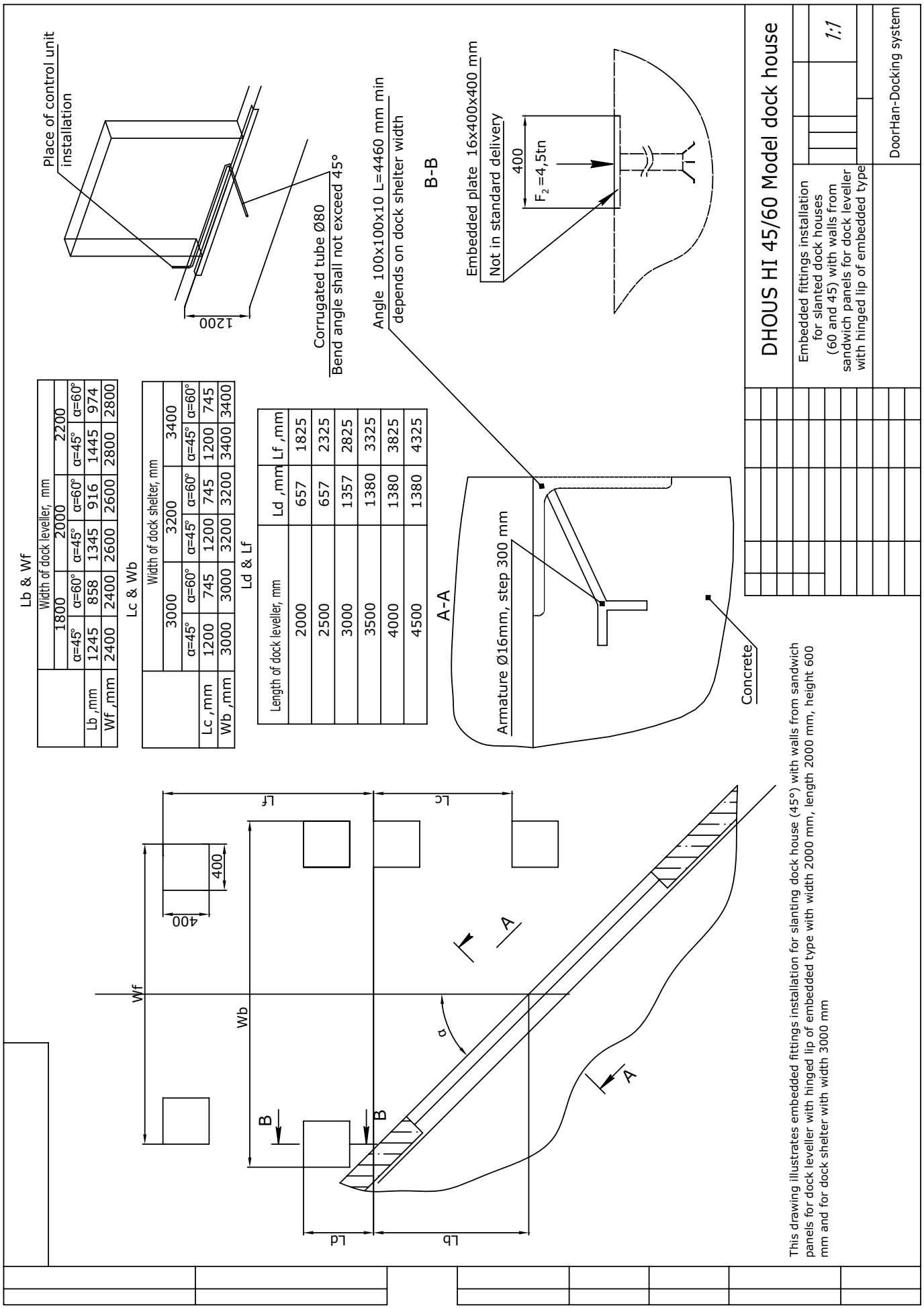

	Width of dock leveller, mm					
	1800		2000		2200	
	α=45°	α=60°	α=45°	α=60°	α=45°	α=60°
Lb ,mm	1245	858	1345	916	1445	974
Wf ,mm	2400	2400	2600	2600	2800	2800

	Width of dock shelter, mm					
	3000		3200		3400	
	α=45°	α=60°	α=45°	α=60°	α=45°	α=60°
Lc ,mm	1200	745	1200	745	1200	745
Wb ,mm	3000	3000	3200	3200	3400	3400

Length of dock leveller, mm	Ld ,mm	Lf ,mm
2000	657	1825
2500	657	2325
3000	1357	2825
3500	1380	3325
4000	1380	3825
4500	1380	4325

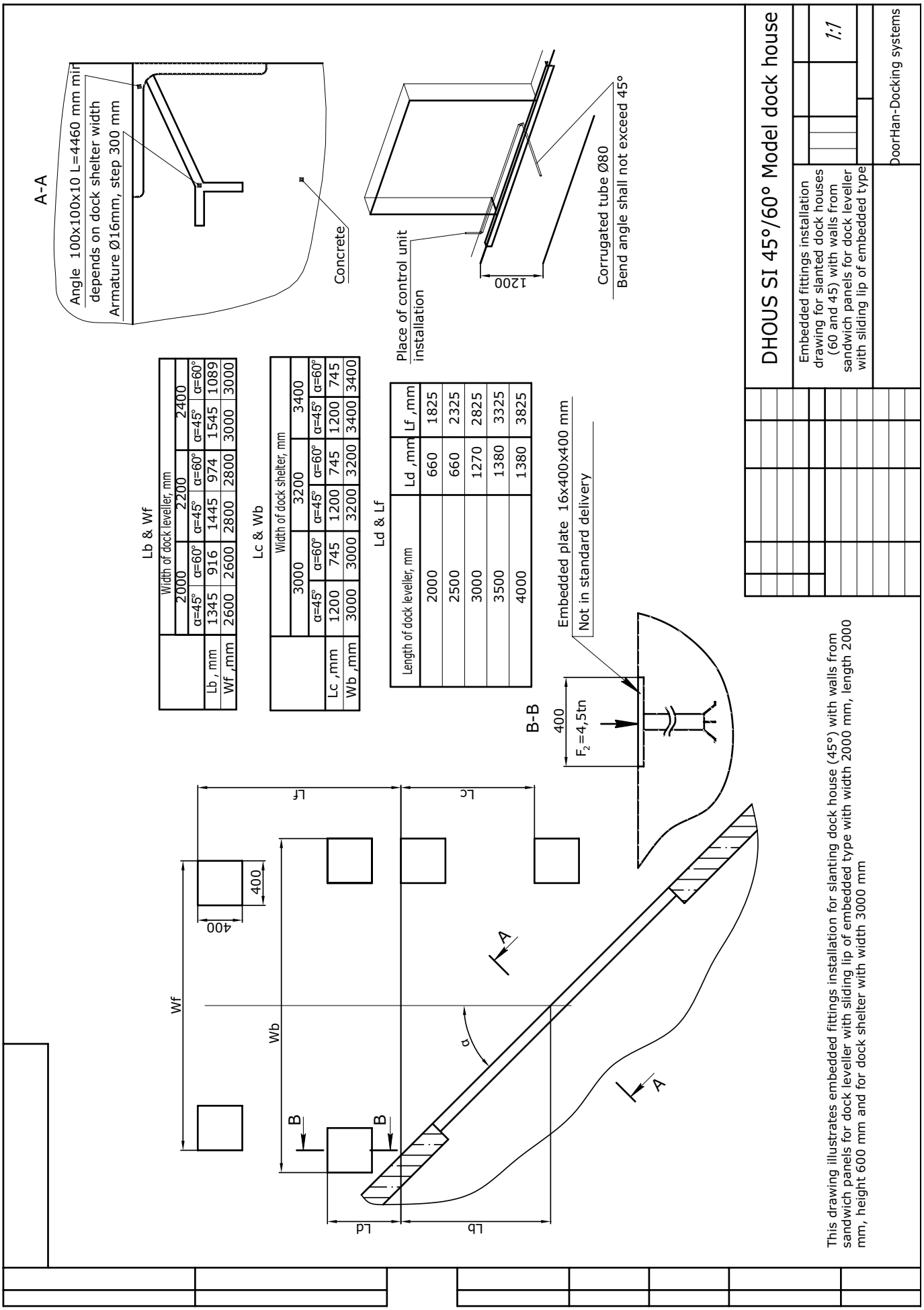

Lb & Wf

	Width of dock leveller, mm					
	2000		2200		2400	
	α=45°	α=60°	α=45°	α=60°	α=45°	α=60°
Lb , mm	1345	916	1445	974	1545	1089
Wf ,mm	2600	2600	2800	2800	3000	3000

Lc & Wb

	Width of dock shelter, mm					
	3000		3200		3400	
	α=45°	α=60°	α=45°	α=60°	α=45°	α=60°
Lc ,mm	1200	745	1200	745	1200	745
Wb ,mm	3000	3000	3200	3200	3400	3400

Ld & Lf

Length of dock leveller, mm	Ld ,mm	Lf ,mm
2000	660	1825
2500	660	2325
3000	1270	2825
3500	1380	3325
4000	1380	3825

DOCK HOUSES OF DHOUS LI (90/60/45) LIGHT SERIES

DHOUS LI 90/60/45 dock houses are used with series DLHHI2018E, DLHHI2020E, DLHHI2518E, DLHHI2520E of dock levellers. They have more light design. The walls are made of corrugated sheet C20/C21, for the roof a corrugated sheet C44 is used. Only D.SH-RT3.4x3.4 and bumpers OE21 can be used with DHOUSE LI. Cover stripes ensure optimal sealing of connection the dock house to the building (Included in standard package).

PERFOMANCE	
Dock house	
Maximal wind load	0.65 kN/m^2
Working temperature	From -35 to +70 C
Roof	
Maximal wind load	3.0 kN/m^2
Walls	
Corrugated sheet	C20/21
Frame	
Class of surface cleaning before painting	Sa 2

STANDARD INSTALLATION DIAGRAM FOR DOCK SHELTERS

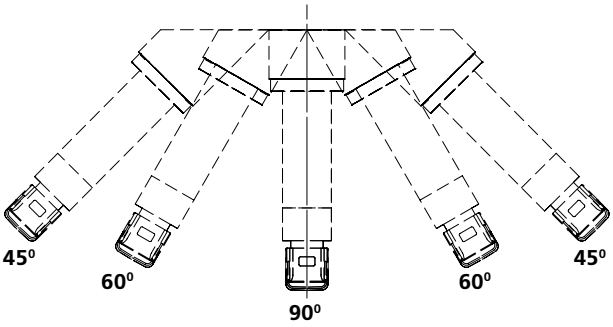

GENERAL VIEW

1. **Frame**
2. **Wall**
3. **Roof**
4. **Legs**
5. **Cover stripes**

DESIGN

DHOUSE LI 90/60/45 DoorHan dock house consist of metal frame, side walls made of corrugated sheet C20/C21, roof, legs and cover stripes. The roof has a 5 degree slope towards the outside to enable rain water flow. The frame consists of 2 bases. On insides of the bases there is a gusset, which prevents personnel feet jamming during operation. The slanted dock house is equipped with a triangle 45⁰ or 60⁰ at the rear part and with a diamond upper sheet. The frame is joined by cross beam, made of square tube.

PACKAGE		
	Standard	**Option**
Angle	90/60/45	
Inside/outside wall colour	Signal white (RAL 9003)/ "Grey ground"	other
Frame colour	Signal blue (RAL5005)	other
Roof	Galvanized sheet C44	
Colour of frame	Signal blue (RAL5005)	

*** Powder coating of frame with preliminary shot blasting.**

WEIGHT OF DOCK HOUSES	Dock leveller length	
	2000 mm	**2500 mm**
Weight of 45 dock house kg	1151	1439
Weight of 60 dock house kg	980	1225
Weight of 90 dock house kg	622	777

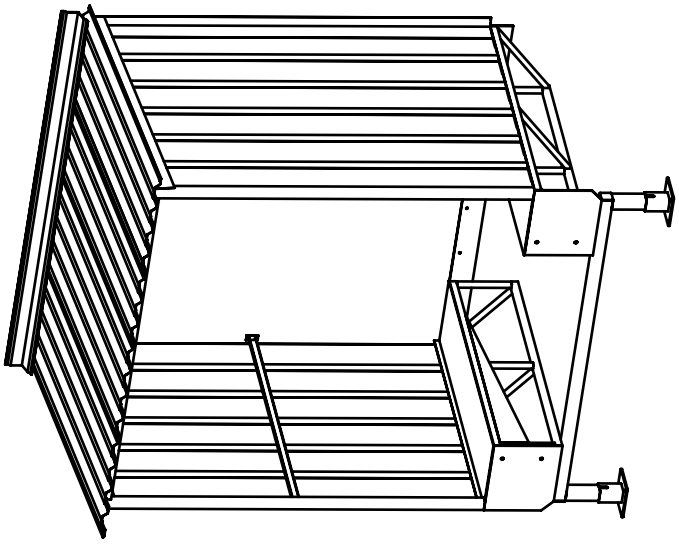

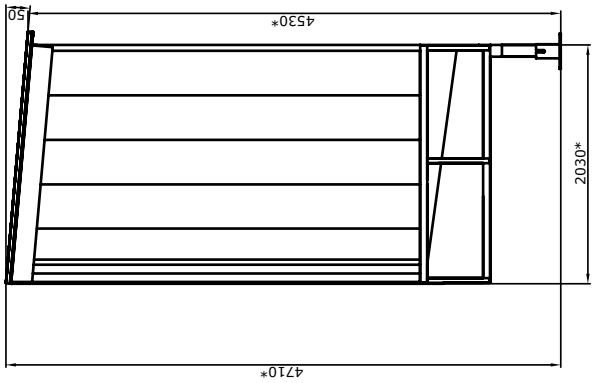

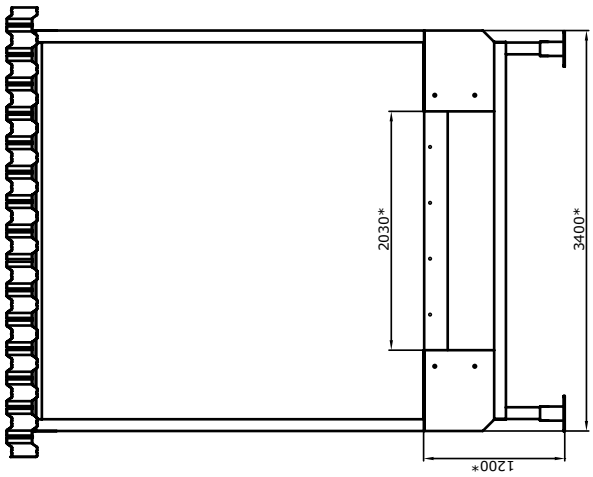

Dock house article	Dock leveller length,mm	Dock leveller width,mm
DHOUS LI 90-20x18	1800	2000
DHOUS LI 90-20x20	2000	2000
DHOUS LI 90-25x18	1800	2500
DHOUS LI 90-25x20	2000	2500

This drawing of straight dock house (90°) of light series DHOUS LI 90-20x20 for dock leveller with hinged lip of embedded type with width 2000 mm, length 2000 mm and height 600 mm and for dock shelter with width 3400 mm and height 3400 mm.

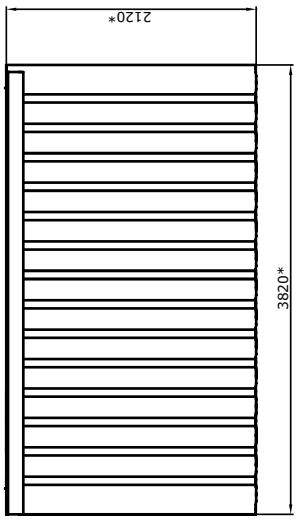

1. *- Reference dimension
2.For more detailed information, please contact DoorHan company.

DHOUS LI 90 Model dock house

Straight dock house (90°) of light series for dock leveller with hinged lip of embedded type

1:1

DoorHan-Docking systems

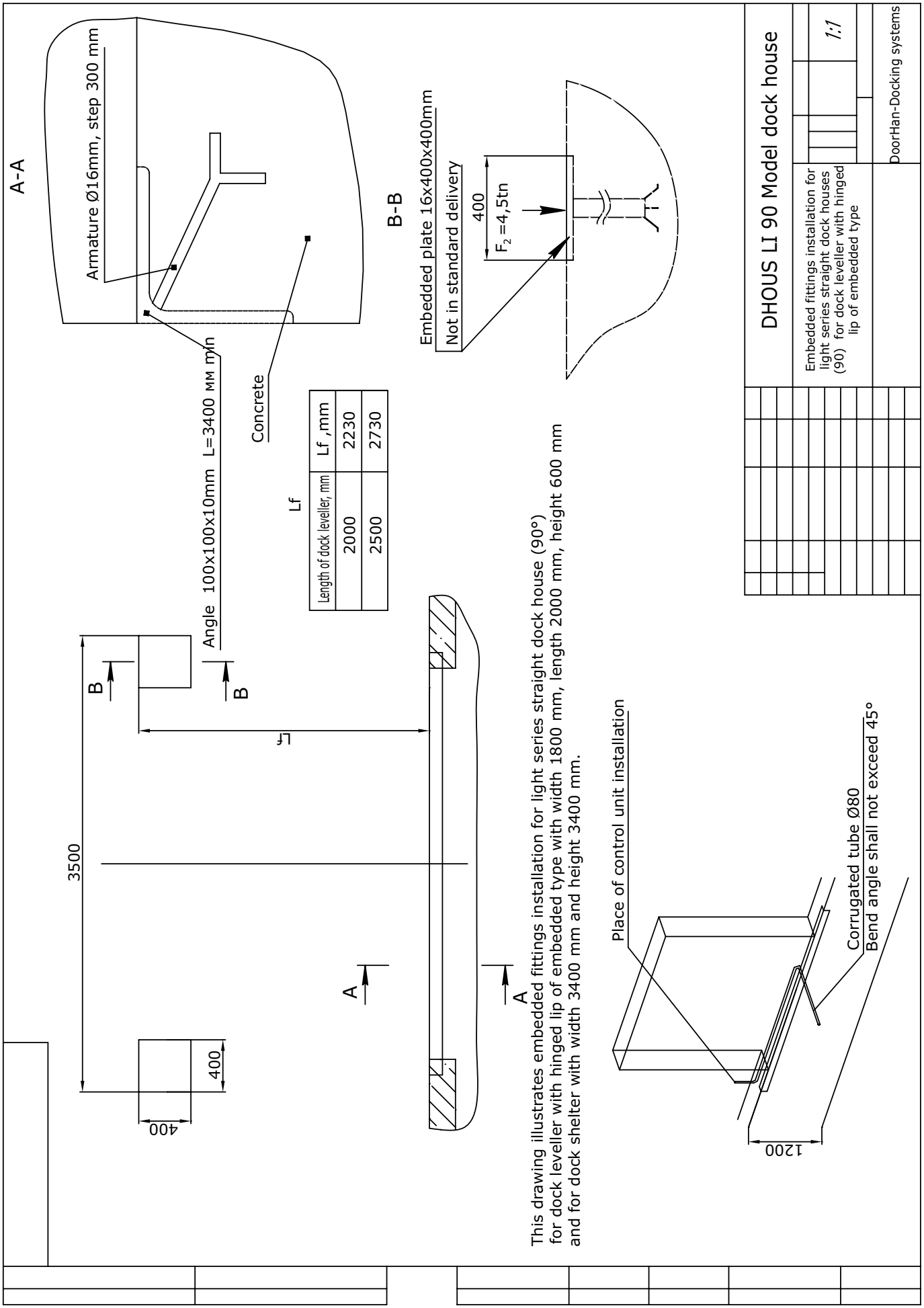
A-A
Armature Ø16mm, step 300 mm
Concrete
Angle 100x100x10mm L=3400 мм min
B-B
Embedded plate 16x400x400mm
Not in standard delivery
400
F_2=4,5tn
Lf
Length of dock leveller, mm
Lf ,mm
2000
2230
2500
2730
B
B
Lf
3500
400
400
A
A
This drawing illustrates embedded fittings installation for light series straight dock house (90°) for dock leveller with hinged lip of embedded type with width 1800 mm, length 2000 mm, height 600 mm and for dock shelter with width 3400 mm and height 3400 mm.
Place of control unit installation
Corrugated tube Ø80
Bend angle shall not exceed 45°
1200
DHOUS LI 90 Model dock house
Embedded fittings installation for light series straight dock houses (90) for dock leveller with hinged lip of embedded type
1:1
DoorHan-Docking systems

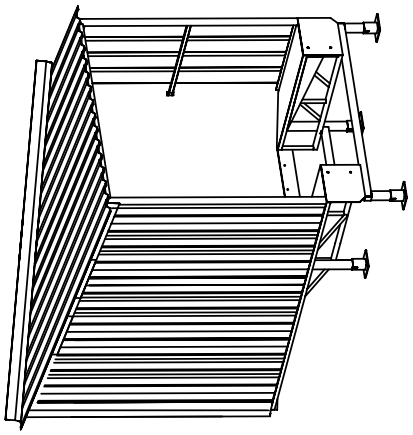

Dock house article	Dock leveller length, mm	Dock leveller width, mm
DHOUS LI 60-20x18	1800	2000
DHOUS LI 60-20x20	2000	2000
DHOUS LI 60-25x18	1800	2500
DHOUS LI 60-25x20	2000	2500

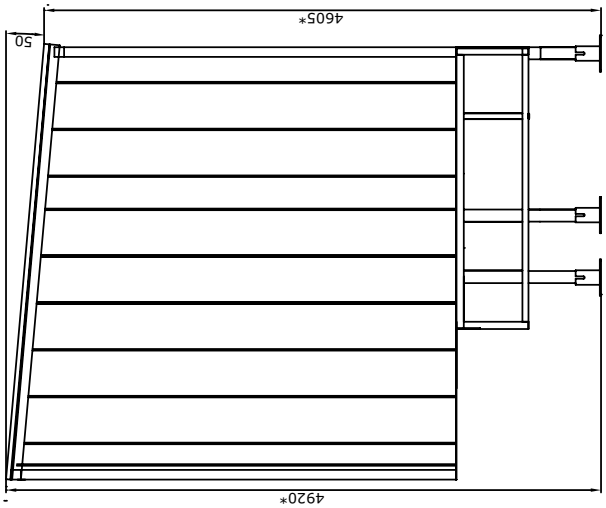

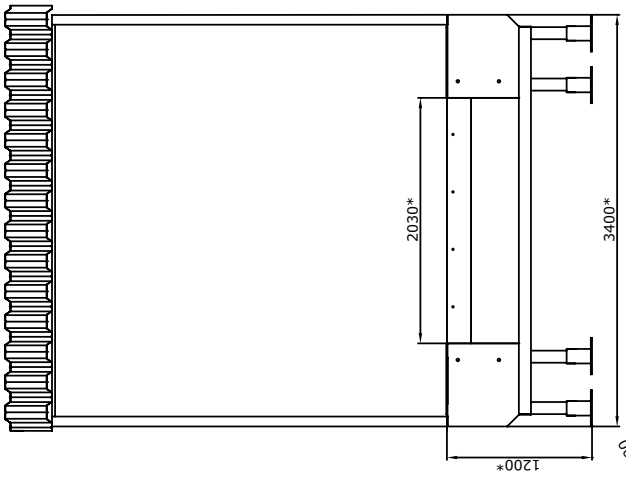

This drawing of slanted dock house (60°) of light series DHOUS LI 90-20x20 for dock leveller with hinged lip of embedded type with width 2000 mm, length 2000 mm and height 600 mm and for dock shelter with width 3400 mm and height 3400 mm.

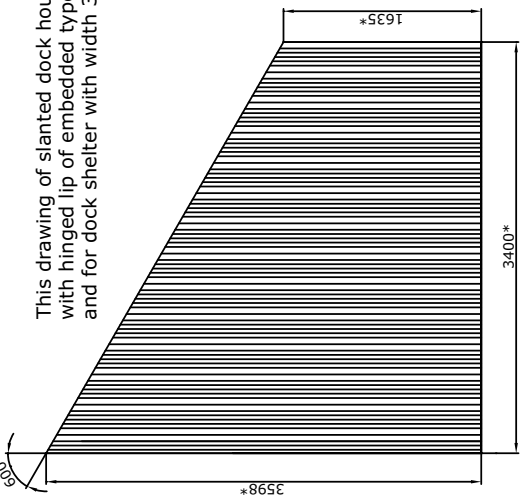

1. *- Reference dimension
2.For more detailed information, please contact DoorHan company.

DHOUS LI 60 Model dock house	1:1
Slanted dock house (60°) of light series for dock leveller with hinged lip of embedded type	DoorHan-Docking system

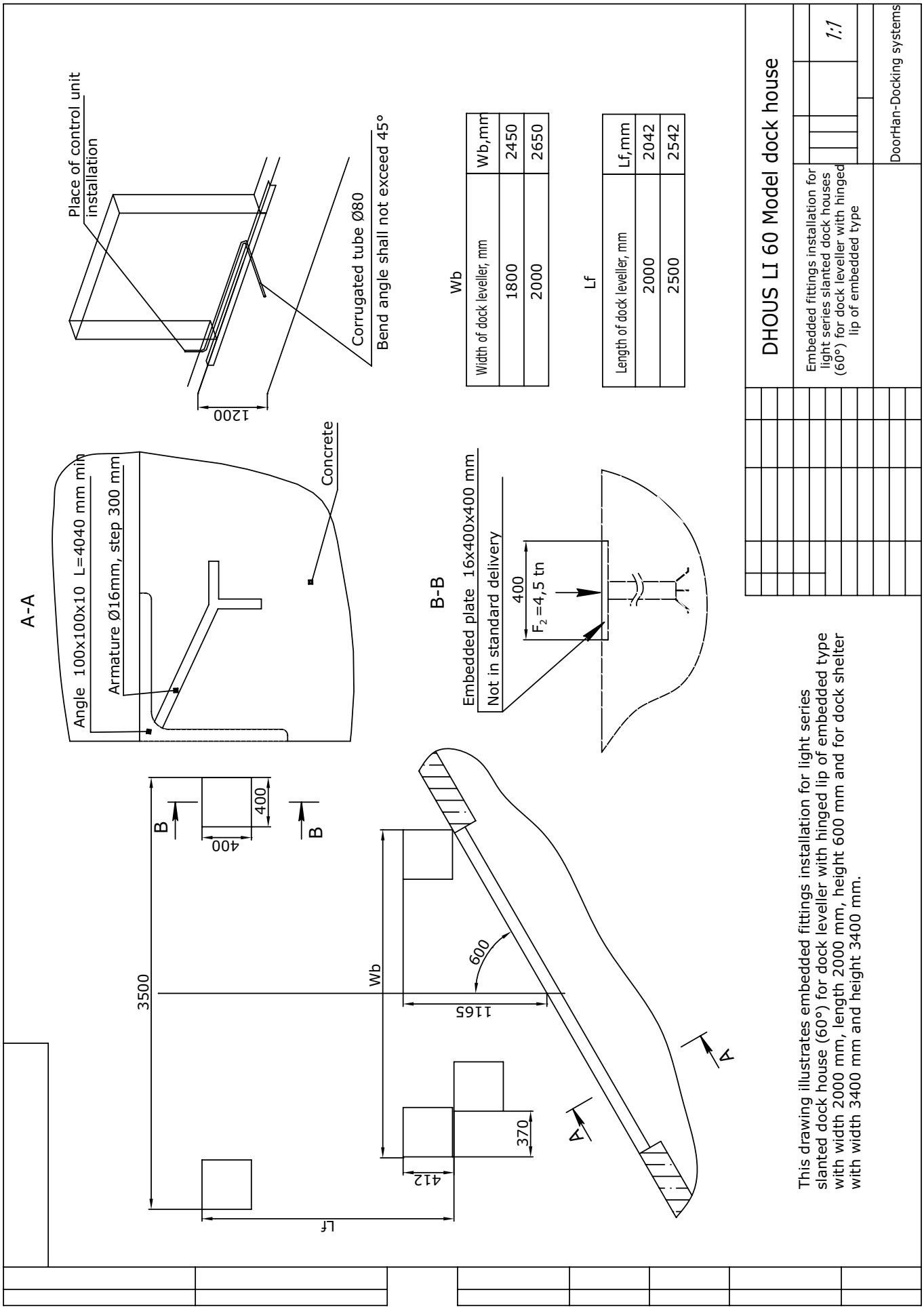

Wb

Width of dock leveller, mm	Wb,mm
1800	2450
2000	2650

Lf

Length of dock leveller, mm	Lf,mm
2000	2042
2500	2542

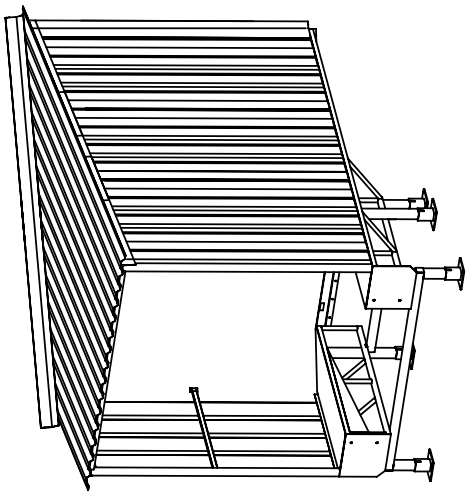

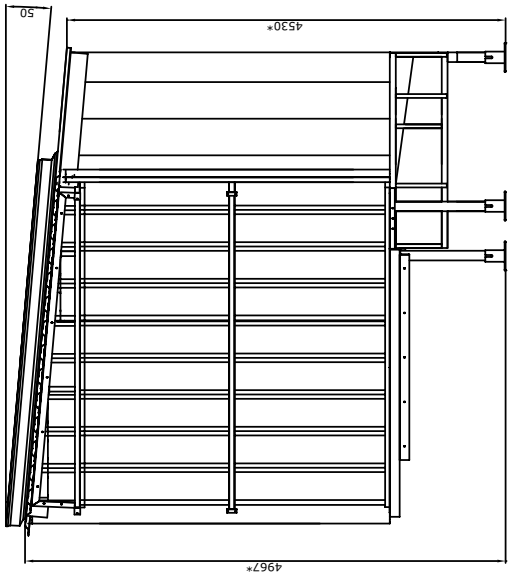

Dock house article	Dock leveller length, mm	Dock leveller width, mm
DHOUS LI 45-20x18	1800	2000
DHOUS LI 45-20x20	2000	2000
DHOUS LI 45-25x18	1800	2500
DHOUS LI 45-25x20	2000	2500

1. *- Reference dimension
2. For more detailed information, please contact DoorHan company.

DHOUS LI 45 Model dock house

Light series slanted dock house (45) for dock leveller with hinged lip of embedded type

1:1

DoorHan-Docking systems

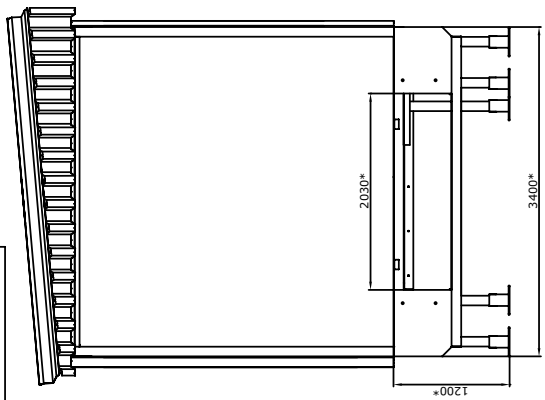

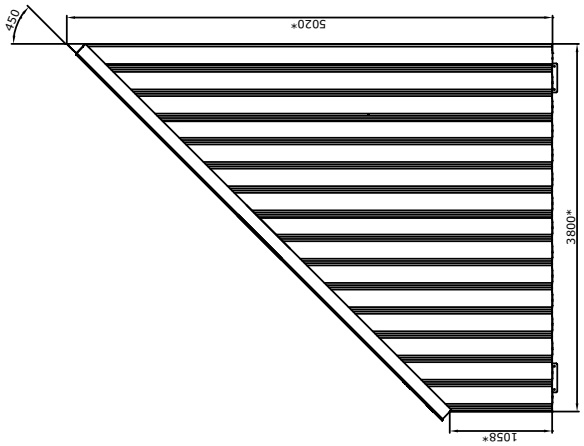

This drawing of slanted dock house (45°) of light series DHOUS LI 90-20x20 for dock leveller with hinged lip of embedded type with width 2000 mm, length 2000 mm and height 600 mm and for dock shelter with width 3400 mm and height 3400 mm.

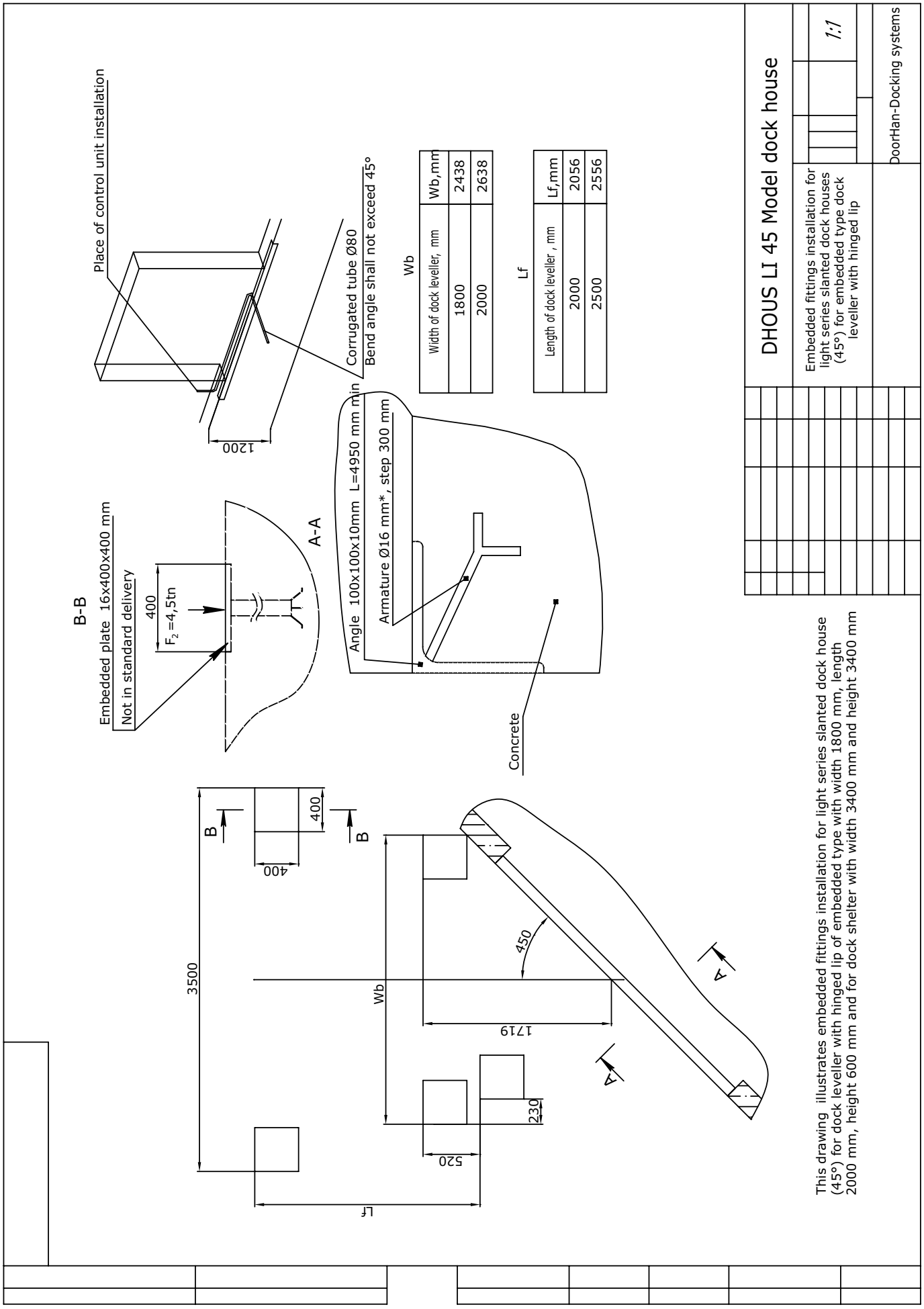
Place of control unit installation
Corrugated tube Ø80
Bend angle shall not exceed 45°
1200
Wb
Width of dock leveller, mm
Wb,mm
1800
2438
2000
2638
Lf
Length of dock leveller , mm
Lf,mm
2000
2056
2500
2556
Angle 100x100x10mm L=4950 mm min
Armature Ø16 mm*, step 300 mm
Concrete
A-A
B-B
Embedded plate 16x400x400 mm
Not in standard delivery
400
F2=4,5tn
3500
400
400
B
B
Wb
450
1719
A
A
230
520
Lf
DHOUS LI 45 Model dock house
Embedded fittings installation for light series slanted dock houses (45°) for embedded type dock leveller with hinged lip
1:1
DoorHan-Docking systems
This drawing illustrates embedded fittings installation for light series slanted dock house (45°) for dock leveller with hinged lip of embedded type with width 1800 mm, length 2000 mm, height 600 mm and for dock shelter with width 3400 mm and height 3400 mm

DOORHAN FLEXIBLE PVC DOORS

GENERAL INFORMATION ABOUT DOORHAN FLEXIBLE PVC DOORS

Due to constant increase of energy prices, modern businesses have to use new energy saving technologies. Heating and cooling of production and storage premises are key expenses of any company. One of the most efficient energy saving technology is to install flexible PVC doors in the often used openings.

The company DoorHan produces 3 types of flexible PVC doors:

- **strip PVC doors;**
- **swing PVC doors;**
- **roll–up speed doors.**

They are used for isolation of production, storage or commercial rooms.

Main Advantages:

- microclimate keeping in premises;
- energy saving;
- elimination of draughts and dust;
- safety operation becouse of flexibility and transparency;
- noise insulation (up 25dB);
- humidity resistance.

STRIP PVC DOORS OF FC100 SERIES

The DoorHan strip PVC door is a set of transparent film strips which are hanged using a fastening. It is easy-to-mount and easy-to-clean. The standard or low temperature film is used, which allows operation of this door at low or high temperatures. The material has high tear resistance and tensile strength, good sound insulation, UV-radiation protection and flexibility. Edges of the films are half-rounded to ensure the safety.

Strip PVC doors can be installed by either suspended or embedded way. The suspension system is based on swinging brackets, made of galvanized or stainless steel.

FILM THICKNESS – OPENING HEIGHT – OVERLAPPING

Film thickness mm	Overlapping %	Opening height mm	
		Inside	Outside
2	50	1500	
2	100	2000	1500
3	33	2000	2000
3	66	3000	2300
3	100	3500	3000
4	50	4500	3200
4	100	6000	5000

SPECIFICATIONS	Standard film	Low temperature film
Density	1.22 g/cm3	1.18 g/cm3
Transparency	80%	80%
Tear resistance	16N/mm2	11.5N/mm2
Elongation	340%	390%
Heat transfer	0.14 W/ (m*K)	0.14 W/ (m*K)
Noise absorption	35 dB	35 dB
Working temperature	From -15 to +50°C	From -25 to +30°C

Film weight	Film type		
	200x2	300x3	400x4
Standard, kg	0,48	1,04	1,92
Low temperature, kg	0,46	1,04	1,92

Weight is indicated for 1 r.m.

Overlapping – film width					
Film width, mm	overlapping, %				
	33	50	66	75	100
200					
300					
400					

GENERAL VIEW

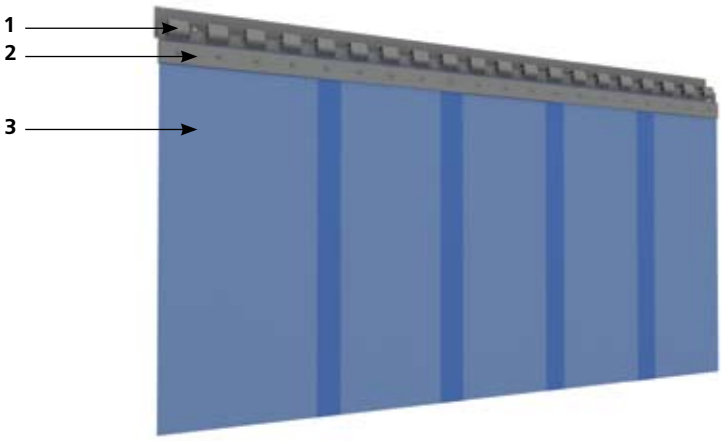

1. **Rack**
2. **Mounting plate**
3. **Film**

DESIGN

Strip PVC doors are made in accordance with customer requirements. Standard widths are 200, 300 and 400 mm, standard thickness are 2,3 and 4 mm respectively.

Strip PVC doors can be mounted with various overlapping. The minimal overlapping gives easy passage through the opening and the maximal one improves room insulation. The combination of opening height and overlapping percentage is a key factor to select the appropriate of the strip PVC doors.

PACKAGE		
	Standard	Option
Film	Working temperature from -15 up to +50°C	Working temperature from -25 up to +30°C
		Red colour (in order to protect against UV-radiation)
Fastening	Galvanized	Stainless steel

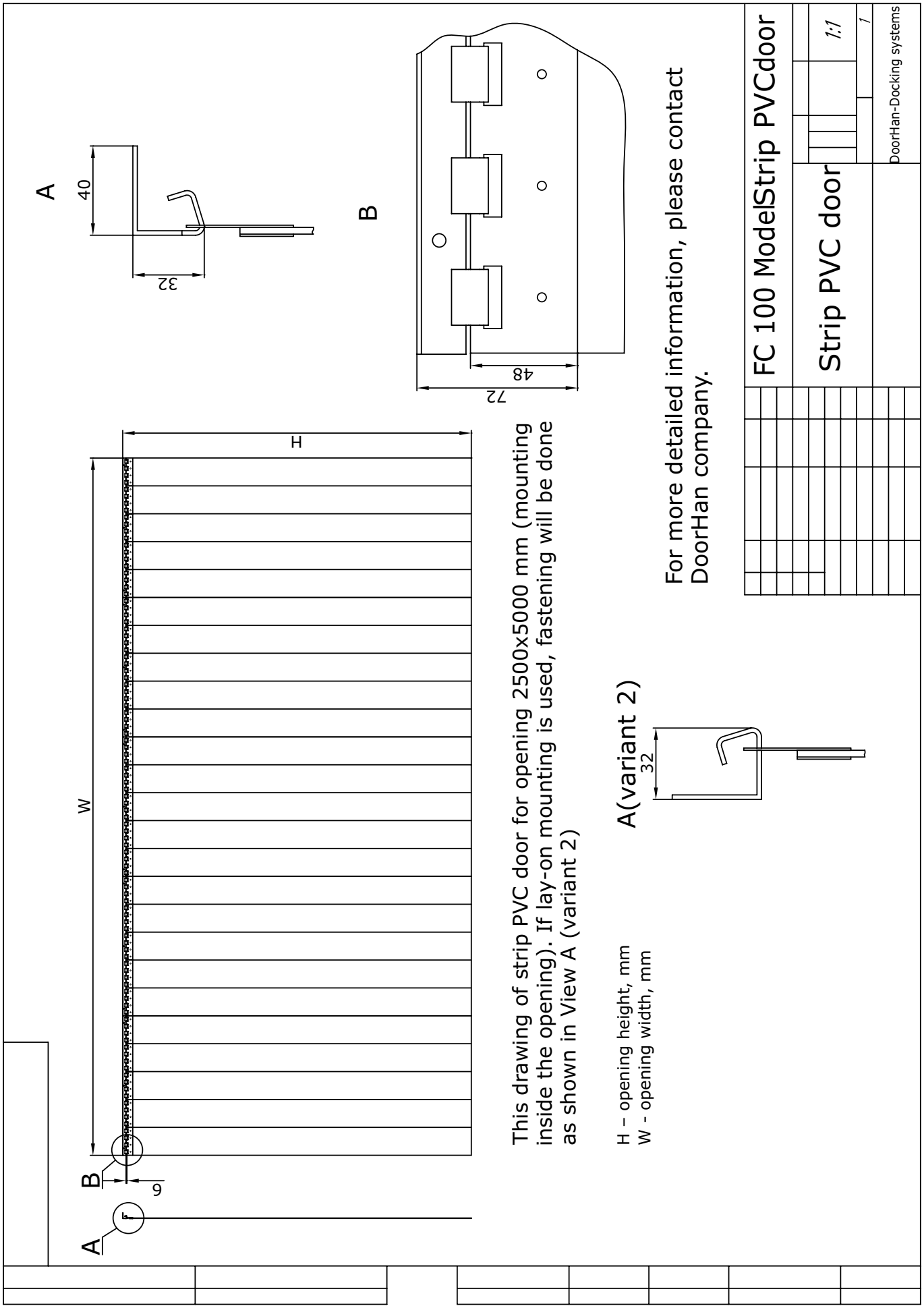
A
40
32
B
72
48
H
W
B
6
A
This drawing of strip PVC door for opening 2500x5000 mm (mounting inside the opening). If lay-on mounting is used, fastening will be done as shown in View A (variant 2)
H – opening height, mm
W - opening width, mm
A(variant 2)
32
For more detailed information, please contact DoorHan company.
FC 100 ModelStrip PVCdoor
Strip PVC door
1:1
1
DoorHan-Docking systems

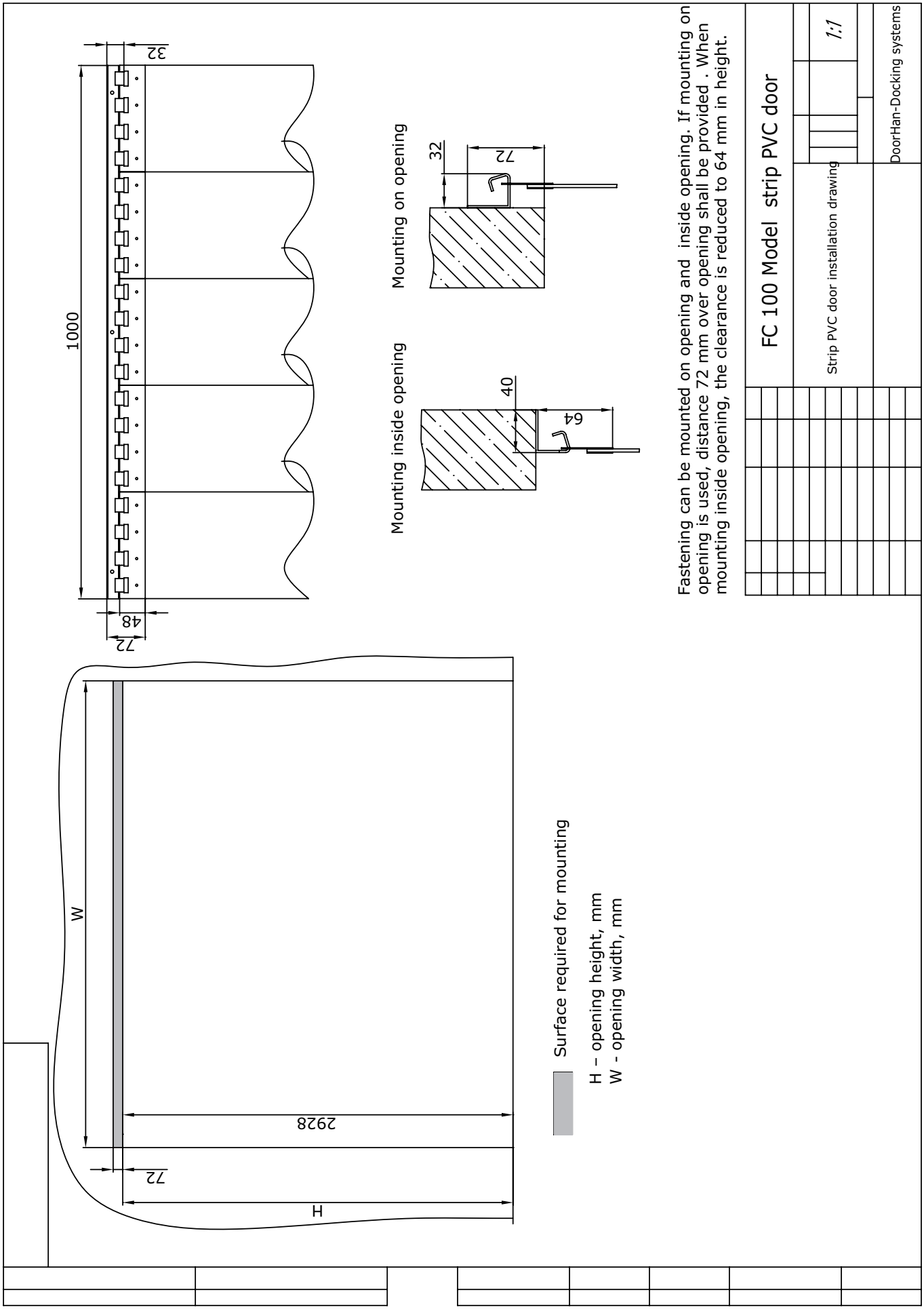
32
1000
48
72
Mounting on opening
32
72
Mounting inside opening
40
64
Fastening can be mounted on opening and inside opening. If mounting on opening is used, distance 72 mm over opening shall be provided . When mounting inside opening, the clearance is reduced to 64 mm in height.
FC 100 Model strip PVC door
Strip PVC door installation drawing
1:1
DoorHan-Docking systems
W
2928
72
H
Surface required for mounting
H – opening height, mm
W - opening width, mm

SWING PVC DOORS OF SSD 110/120 SERIES

Swing PVC doors are made of elastic PVC film. Upon customers request the door leaf can be made of transparent, non-transparent film or even combined. It can be used at temperature down to -30°C (if low temperature film is used); The doors work silently, easy-to-operate and easy-to-clean. Design of the swing PVC doors makes them immediately return to the original position, closing after passage through them. The frame is made of aluminium profile; the design is strong and reliable.

DIMENSIONS OF SINGLE-LEAF SWING PVC DOORS

	Width, mm							
Height, mm	800	900	1000	1100	1200	1300	1400	1500
2000								
2100								
2200								
2300								
2400								
2500								
2600								
2700								
2800								
2900								
3000								

DIMENSIONS OF DOUBLE-LEAF SWING PVC DOORS

	Width, mm																		
Height, mm	1200	1300	1400	1500	1600	1700	1800	1900	2000	2100	2200	2300	2400	2500	2600	2700	2800	2900	3000
2000																			
2100																			
2200																			
2300																			
2400																			
2500																			
2600																			
2700																			
2800																			
2900																			
3000																			

SPECIFICATIONS	Film type	
	Standard film	**Low temperature film**
Density	1,22 g/cm3	1,18 g/cm3
Hardness	75 HSA	63 HSA
Tear resistance	16 N/mm2	11,5 N/mm2
Elongation	340 %	390 %
Heat transfer	0,14 Watt/m ^{0}C	
Inflammability	Damp, not burn	
Moisture absorption	0,1	0,12
Transparency	80 %	
Light resistance	not change	
Noise absorption	35 Db	
Minimal operation temperature	-15 ^{0}C	-30 ^{0}C

LEAF TYPES

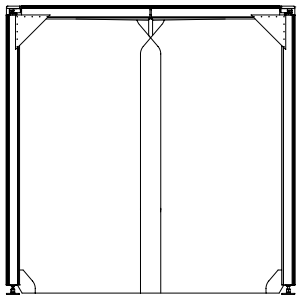

Transparent leaf

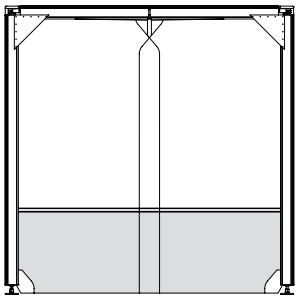

Transparent top and non-transparent bottom

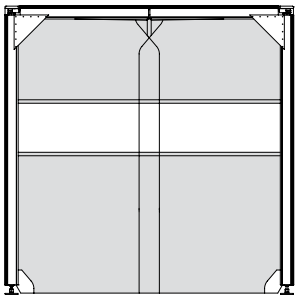

Leaf with transparent panel

GENERAL VIEW

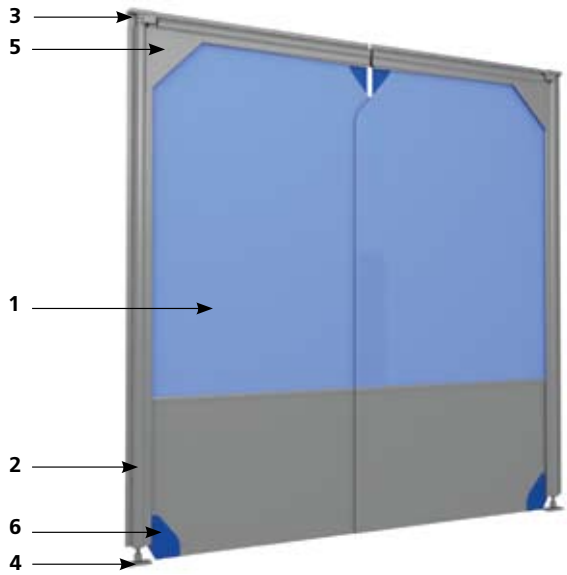

1. **PVC door leaf**
2. **aluminium profile**
3. **swing mechanism**
4. **support**
5. **gusset**
6. **protection plates**

DESIGN

The bearing frame of the door is made of round-shaped aluminium profiles, which are connected to each other using connection bracket «vane». An additional seal is installed in the profile to ensure sealing of the door. The door leaf is made of PVC. The swing mechanism is a spring based sytem designed to return the door in closed position.

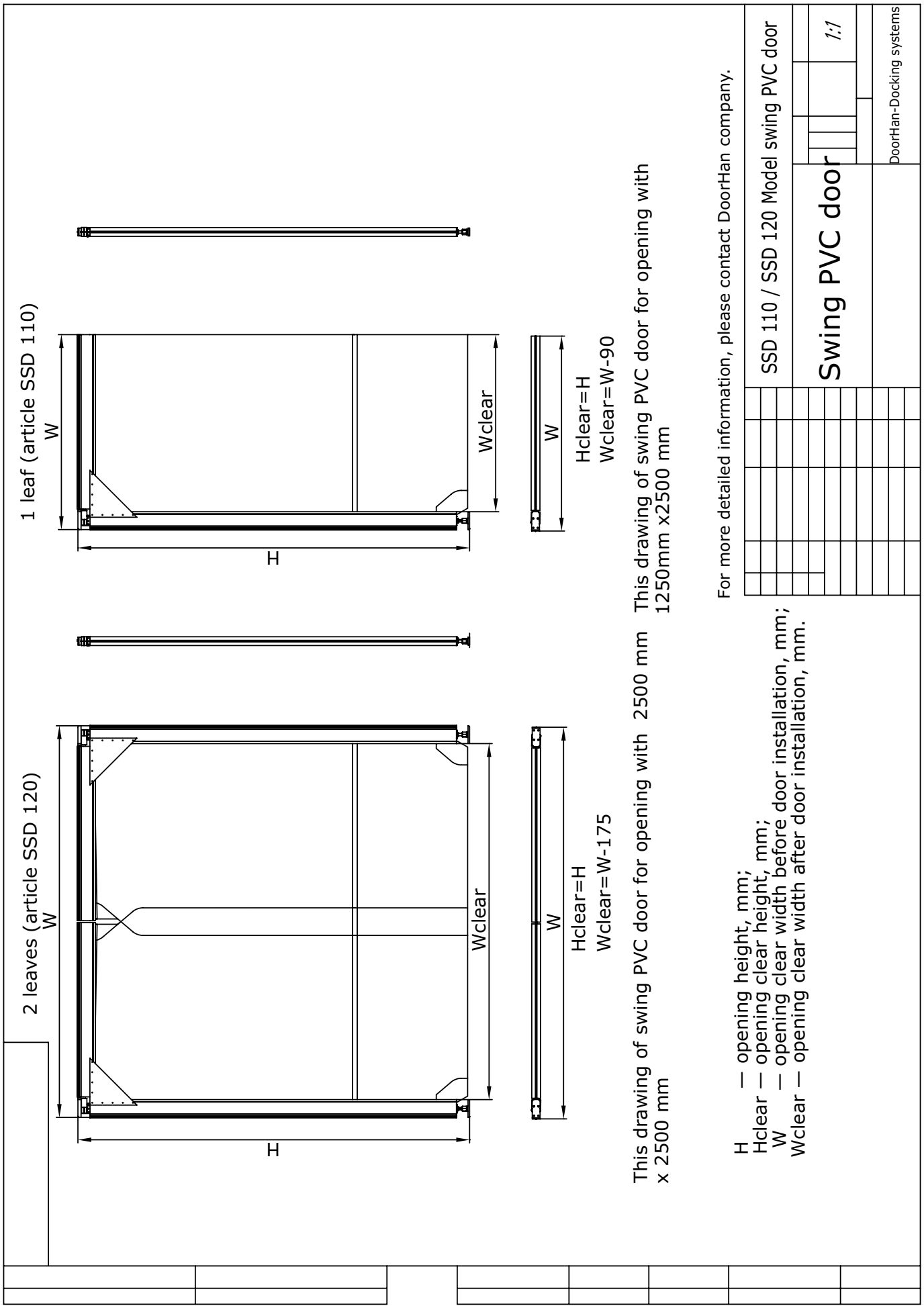
1 leaf (article SSD 110)
W
H
Wclear
W
Hclear=H
Wclear=W-90
This drawing of swing PVC door for opening with 1250mm x2500 mm
2 leaves (article SSD 120)
W
H
Wclear
W
Hclear=H
Wclear=W-175
This drawing of swing PVC door for opening with 2500 mm x 2500 mm
H — opening height, mm;
Hclear — opening clear height, mm;
W — opening clear width before door installation, mm;
Wclear — opening clear width after door installation, mm.
For more detailed information, please contact DoorHan company.
SSD 110 / SSD 120 Model swing PVC door
Swing PVC door
1:1
DoorHan-Docking systems

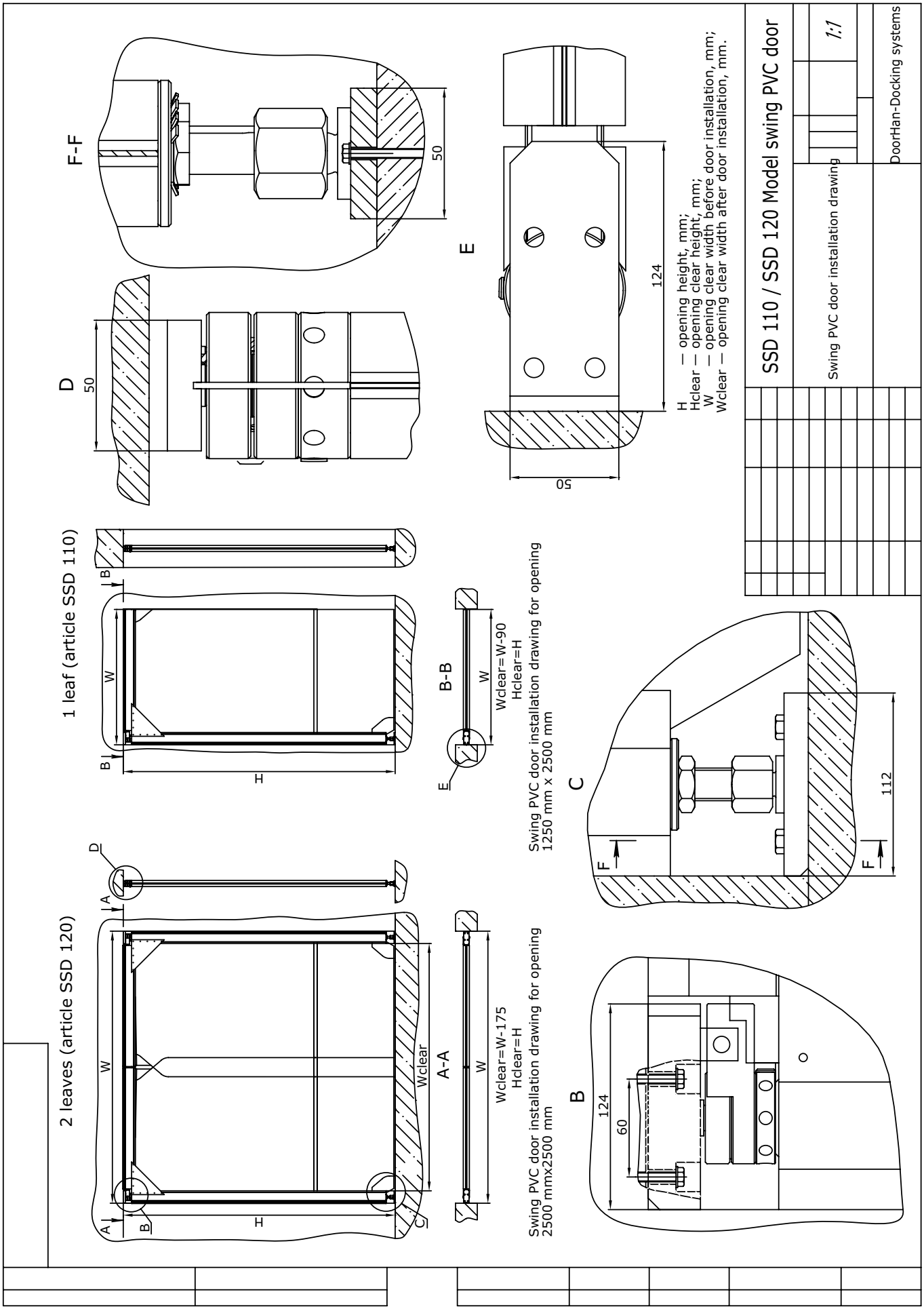
F-F
50
D
50
E
124
50
H — opening height, mm;
Hclear — opening clear height, mm;
W — opening clear width before door installation, mm;
Wclear — opening clear width after door installation, mm.
SSD 110 / SSD 120 Model swing PVC door
Swing PVC door installation drawing
1:1
DoorHan-Docking systems
1 leaf (article SSD 110)
W
H
B
B-B
W
Wclear=W-90
Hclear=H
E
Swing PVC door installation drawing for opening
1250 mm x 2500 mm
C
F
F
112
2 leaves (article SSD 120)
W
H
A
B
C
D
Wclear
A-A
W
Wclear=W-175
Hclear=H
Swing PVC door installation drawing for opening
2500 mmx2500 mm
B
124
60

ROLL UP HIGH SPEED DOOR OF RUSD100 SERIES

The curtain of DoorHan roll-up speed doors is made of PVC with polyester fabric reinforcement (700-1700g/m2) with transparent parts, which allow to see tghrow the door. They provide minimal heat losses. Due to high operation speed with intencive usage, the room will keep a required microclimate. Opening/closing speed within wide range allows precise adjustment of door operation according to the requirements. Safety operation of the door is guaranteed by absence hard elements in curtain. The door has break away and a self-restoring function. The frame and all housings are made of aluminium. Due to modularity of the Design you can easily replace some elements of the door.

DIMENSIONS/FEATURES	
Max opening size	5000x5000 mm
Min opening size	1000x1000 mm
Curtain	Polyester with 2 PVC layers inside/outside
Side supports	Aluminium h= 2mm
Standard colours of frame/ curtain	white, green, blue, red, yellow, grey

PERFOMANCE	
Power supply	220V, 50/60 Hz
Control voltage	24 V
Motor	0.5 -1.1 kW
Control unit	external
Protection class of control unit	IP55
Maximal opening/closing speed	1...2/0.5 m/sek
Thickness of non-transparent material	0.7 -1.7 mm
Thickness of transparent material	2 mm
Working temperature	From -5 up to +50 C
Maximal pressure	4 kg/m
Maximal wind load	30 km/h

GENERAL VIEW

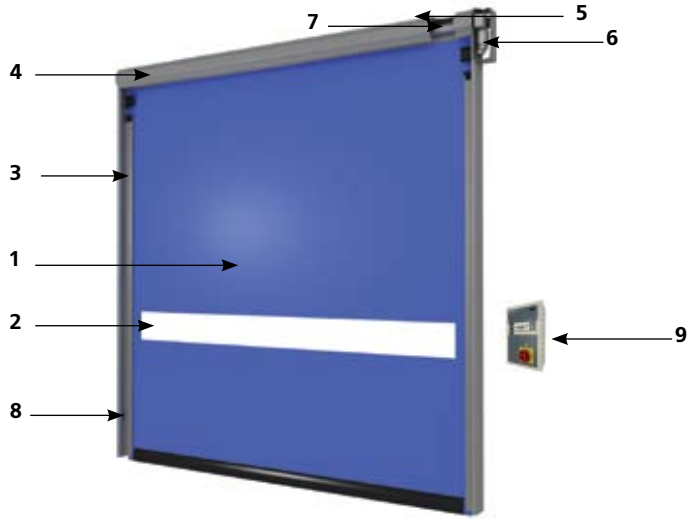

1. Door curtain
2. Window
3. Uprights
4. Shaft housing
5. Operator housing
6. Operator
7. Shaft
8. Safety photocells
9. Control unit

DOOR CURTAIN DESIGN

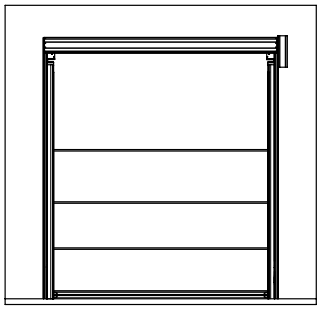

Non-transparent curtain

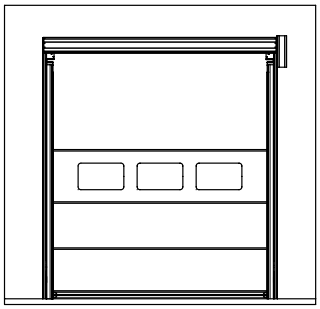

Curtain with semi-round windows

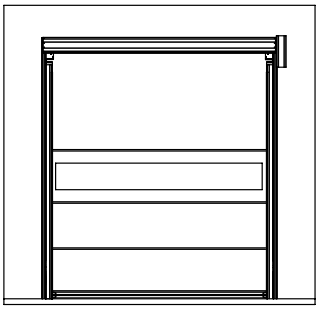

Curtain with transparent panel

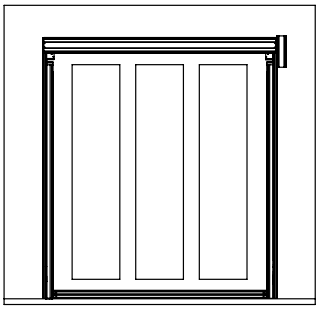

Transparent curtain with signal stripes

DESIGN

The rollup high speed door consists of the following components:

- curtain;
- uprights with mounted on them safety photocells and door self-restoring system;
- operator with control unit;
- shaft housing;
- operator housing.

PACKAGE

	Standard	Option
Window		A row of semi-round windows, transparent panel
Door frame colour	white, green, blue, red, yellow, grey	other upon request
Door curtain colour	white, green, blue, red, yellow, grey	
Control	Key panel on control unit	Additional key panel, cord switch, magnetic loop, photocells, signal lamp, remote control kit, sensor-radar

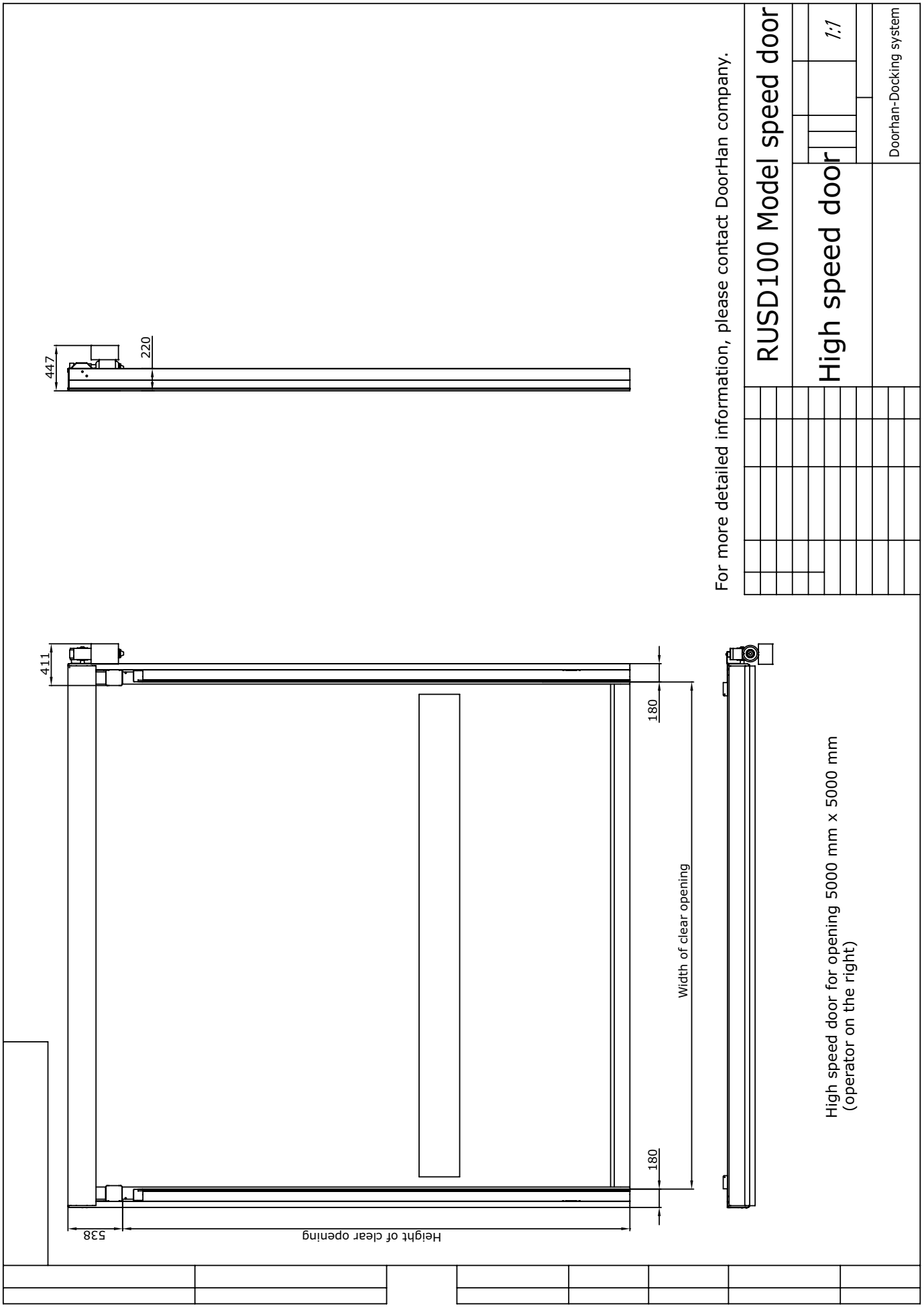
447
220
411
180
180
Width of clear opening
538
Height of clear opening
For more detailed information, please contact DoorHan company.
RUSD100 Model speed door
High speed door
1:1
Doorhan-Docking system
High speed door for opening 5000 mm x 5000 mm
(operator on the right)

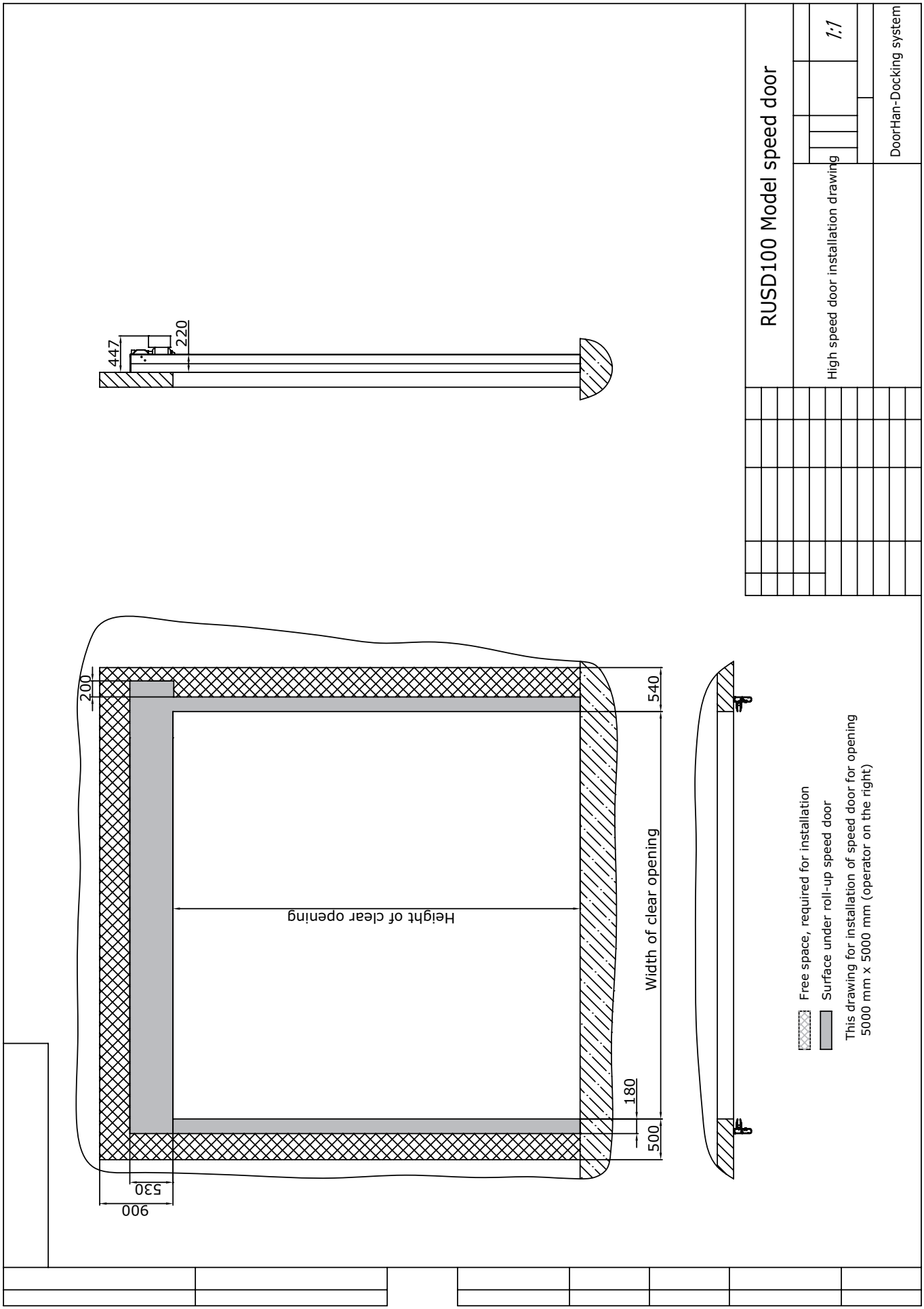
RUSD100 Model speed door
High speed door installation drawing
1:1
DoorHan-Docking system
447
220
200
540
Height of clear opening
Width of clear opening
180
500
530
900
Free space, required for installation
Surface under roll-up speed door
This drawing for installation of speed door for opening
5000 mm x 5000 mm (operator on the right)

OPTIONAL EQUIPMENT

WHEEL GUIDES

The wheel guides are used for quick and precise parking of trucks in a dock for preventing of dock shelters and walls damage. They are designed to minimize possible contact with the truck wheel rim. The wheek guides are steel tubes with diameter 159 mm with bends for fastening. They are installed in front of a dock. They can be installed either anchor bolt fastening or concreting way. As the guide wheels are exposed to high dynamic load, the model with anchor bolt fastening shall be installed only on the concrete area. The wheel guides for concreting shall be used in case of asphalt coated area.

RUBBER BUMPERS

The rubber bumpers provide safe approach of trucks to the loading place and prevent damage of the walls of the building. They cushion a shock in case of incorrect parking. They are made of technical rubber, which increases their wear resistance and durability. The following models of bumpers are available:

- small bumper (250x250x100 mm);
- large bumper (500x250x100 mm);
- console type bumper (500x250x100 mm);
- sliding bumper (500x250x100).

BARRIERS

The barriers could be installed inside the room and prevent damage of walls of the building. The barriers ensure correct and safe moving of the forklift in the storage room and near the dock. The barrier is a round tube with diameter 100-159 mm. It can be of desired arbitrary shape and made according to customer requirements.

SHOCK COLUMN

The shock column prevents damage of door vertical angles in case of collision with forklift. It is installed inside the room in front of the door vertical angles. Diameter of the shock column is 100 – 159 mm.

FRAME FOR CONCRETING

The frame for concreting is manufactured in accordance with dock leveller dimensions.

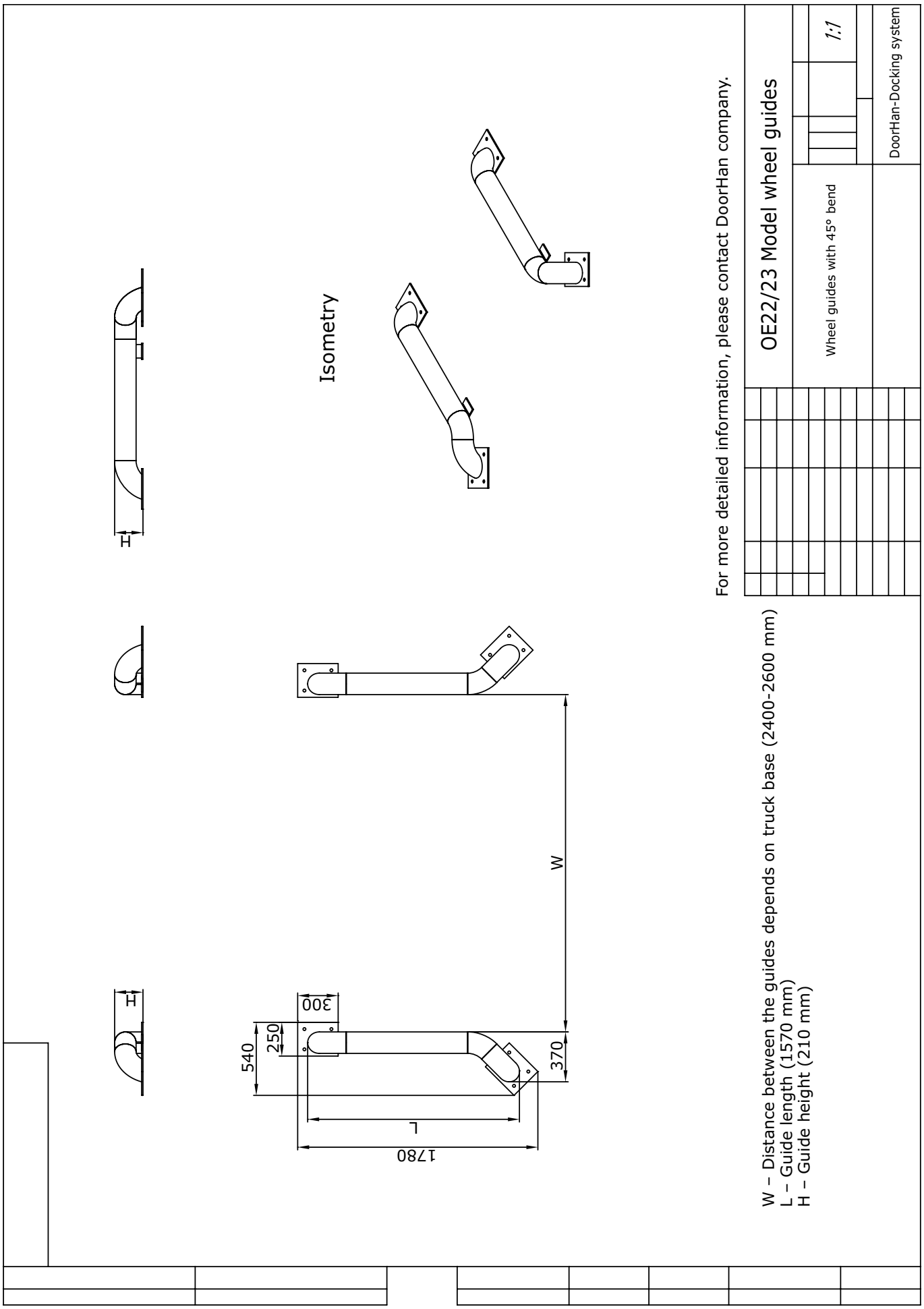
H
Isometry
H
W
H
300
540
250
370
L
1780
For more detailed information, please contact DoorHan company.
OE22/23 Model wheel guides
Wheel guides with 45° bend
1:1
DoorHan-Docking system
W – Distance between the guides depends on truck base (2400-2600 mm)
L – Guide length (1570 mm)
H – Guide height (210 mm)

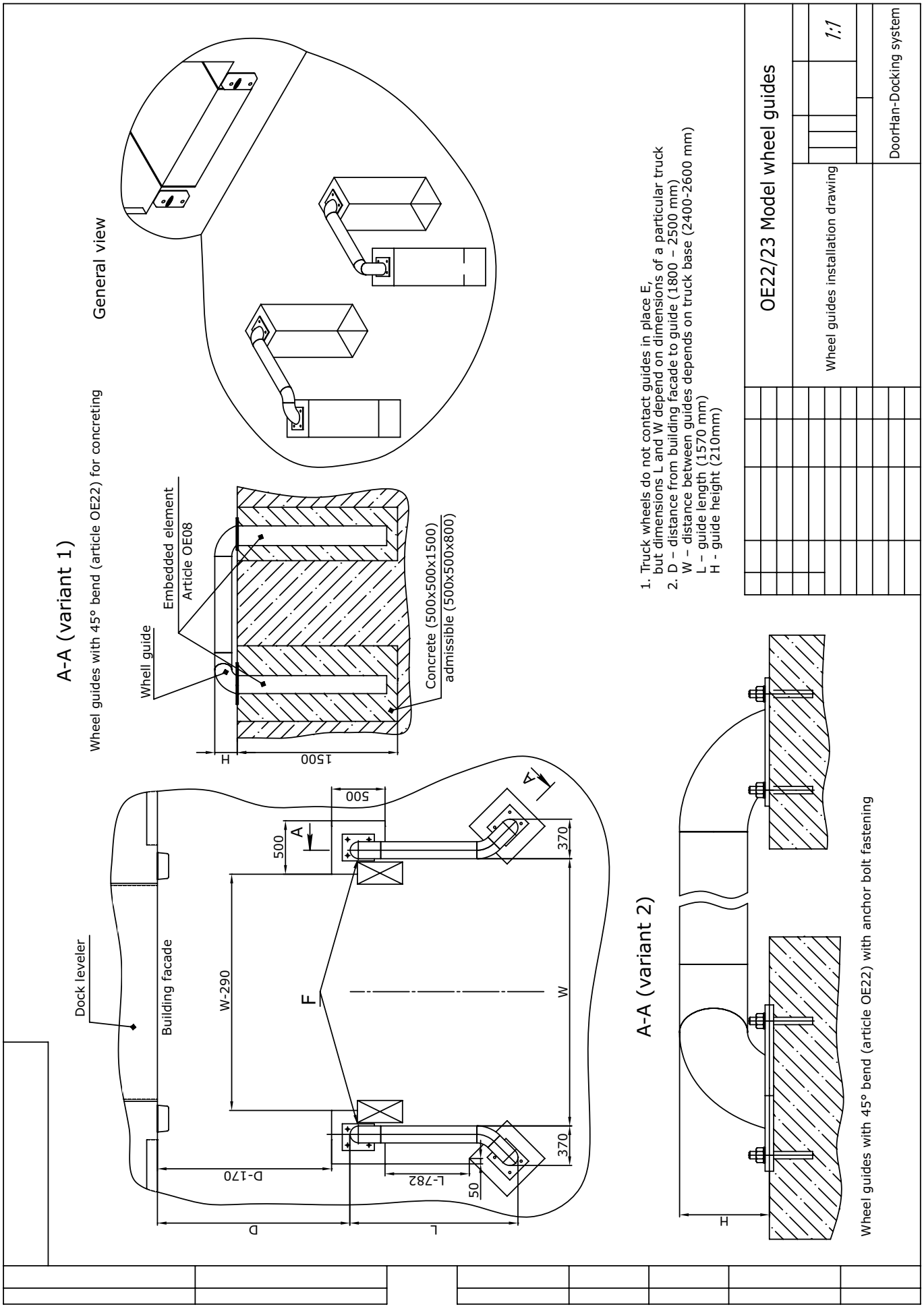
General view
A-A (variant 1)
Wheel guides with 45° bend (article OE22) for concreting
Embedded element
Article OE08
Whell guide
Concrete (500x500x1500)
admissible (500x500x800)
H
1500
Dock leveler
Building facade
W-290
F
500
A
370
W
D-170
L-782
50
D
L
A-A (variant 2)
H
Wheel guides with 45° bend (article OE22) with anchor bolt fastening
1. Truck wheels do not contact guides in place E,
but dimensions L and W depend on dimensions of a particular truck
2. D – distance from building facade to guide (1800 – 2500 mm)
W – distance between guides depends on truck base (2400-2600 mm)
L – guide length (1570 mm)
H - guide height (210mm)
OE22/23 Model wheel guides
Wheel guides installation drawing
1:1
DoorHan-Docking system

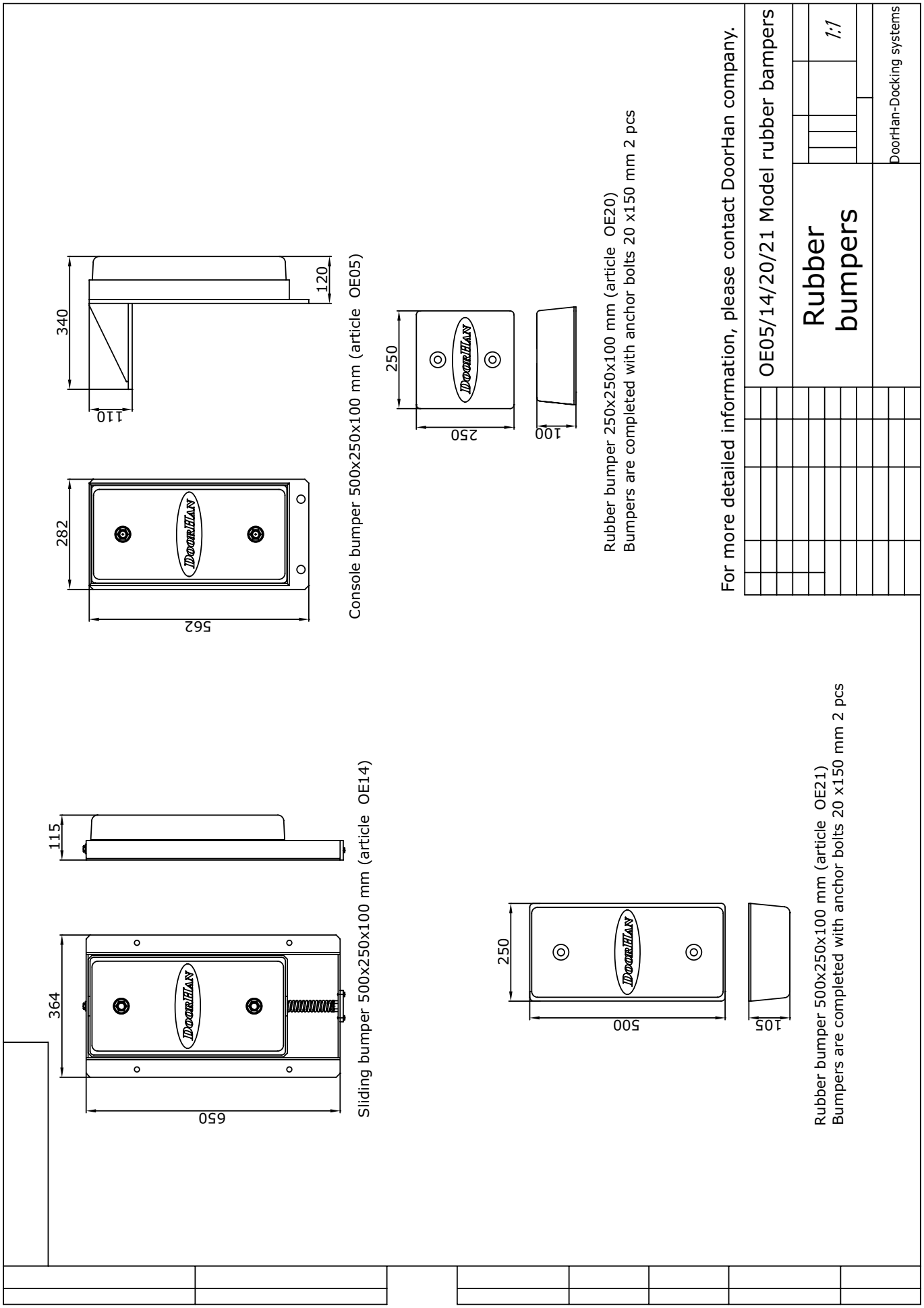
340
120
110
282
562
Console bumper 500x250x100 mm (article OE05)
250
250
100
Rubber bumper 250x250x100 mm (article OE20)
Bumpers are completed with anchor bolts 20 x150 mm 2 pcs
For more detailed information, please contact DoorHan company.
OE05/14/20/21 Model rubber bampers
Rubber bumpers
1:1
DoorHan-Docking systems
115
364
650
Sliding bumper 500x250x100 mm (article OE14)
250
500
105
Rubber bumper 500x250x100 mm (article OE21)
Bumpers are completed with anchor bolts 20 x150 mm 2 pcs

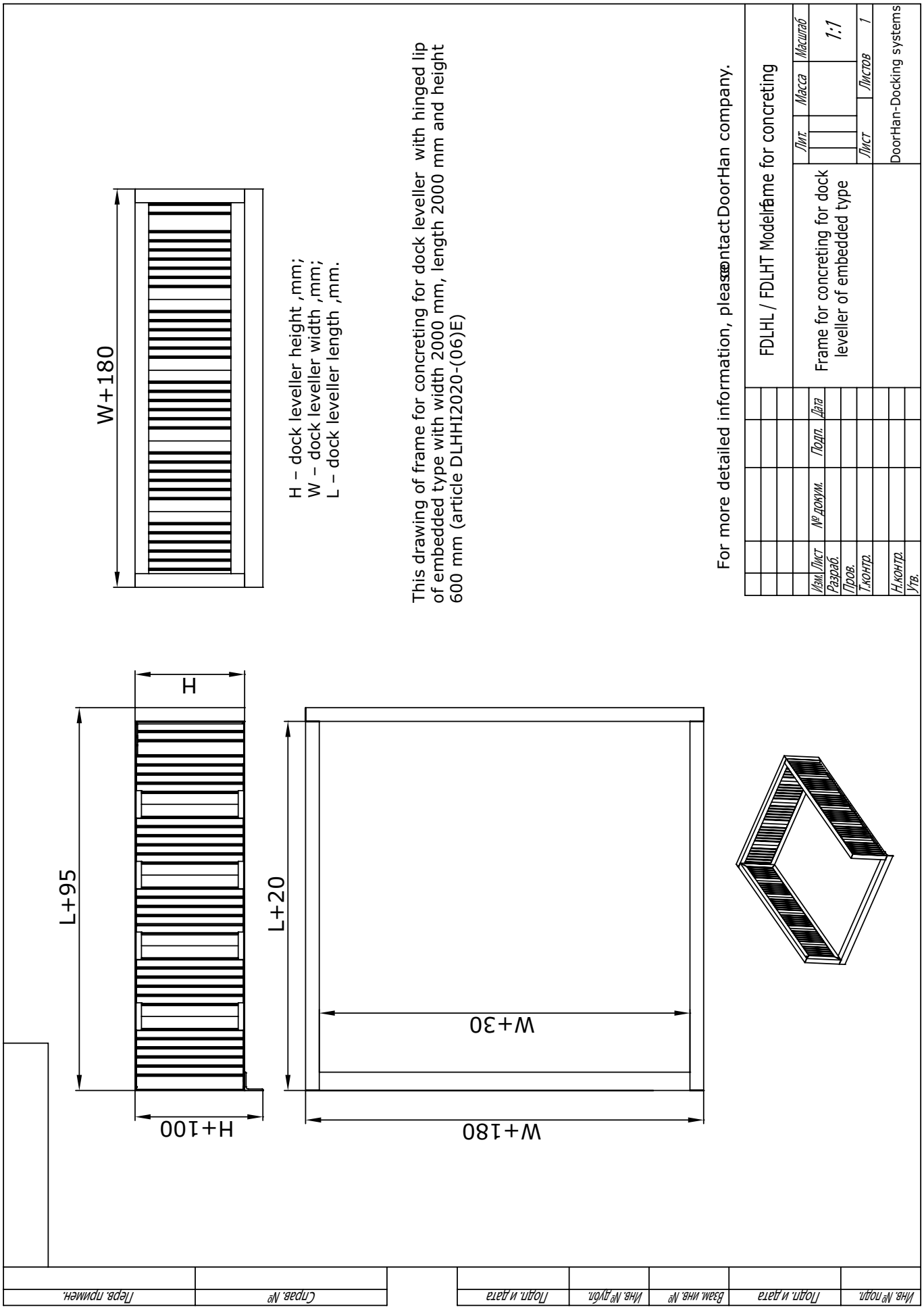
W+180
H – dock leveller height ,mm;
W – dock leveller width ,mm;
L – dock leveller length ,mm.
This drawing of frame for concreting for dock leveller with hinged lip of embedded type with width 2000 mm, length 2000 mm and height 600 mm (article DLHHI2020-(06)E)
For more detailed information, please contact DoorHan company.
FDLHL / FDLHT Models
Frame for concreting
Frame for concreting for dock leveller of embedded type
Лит.
Масса
Масштаб
1:1
Лист
Листов
1
DoorHan-Docking systems
Изм. Лист
№ докум.
Подп.
Дата
Разраб.
Пров.
Т.контр.
Н.контр.
Утв.
H
L+95
L+20
W+30
H+100
W+180
Инв. № подл.
Подп. и дата
Взам. инв. №
Инв. № дубл.
Подп. и дата
Справ. №
Перв. примен.

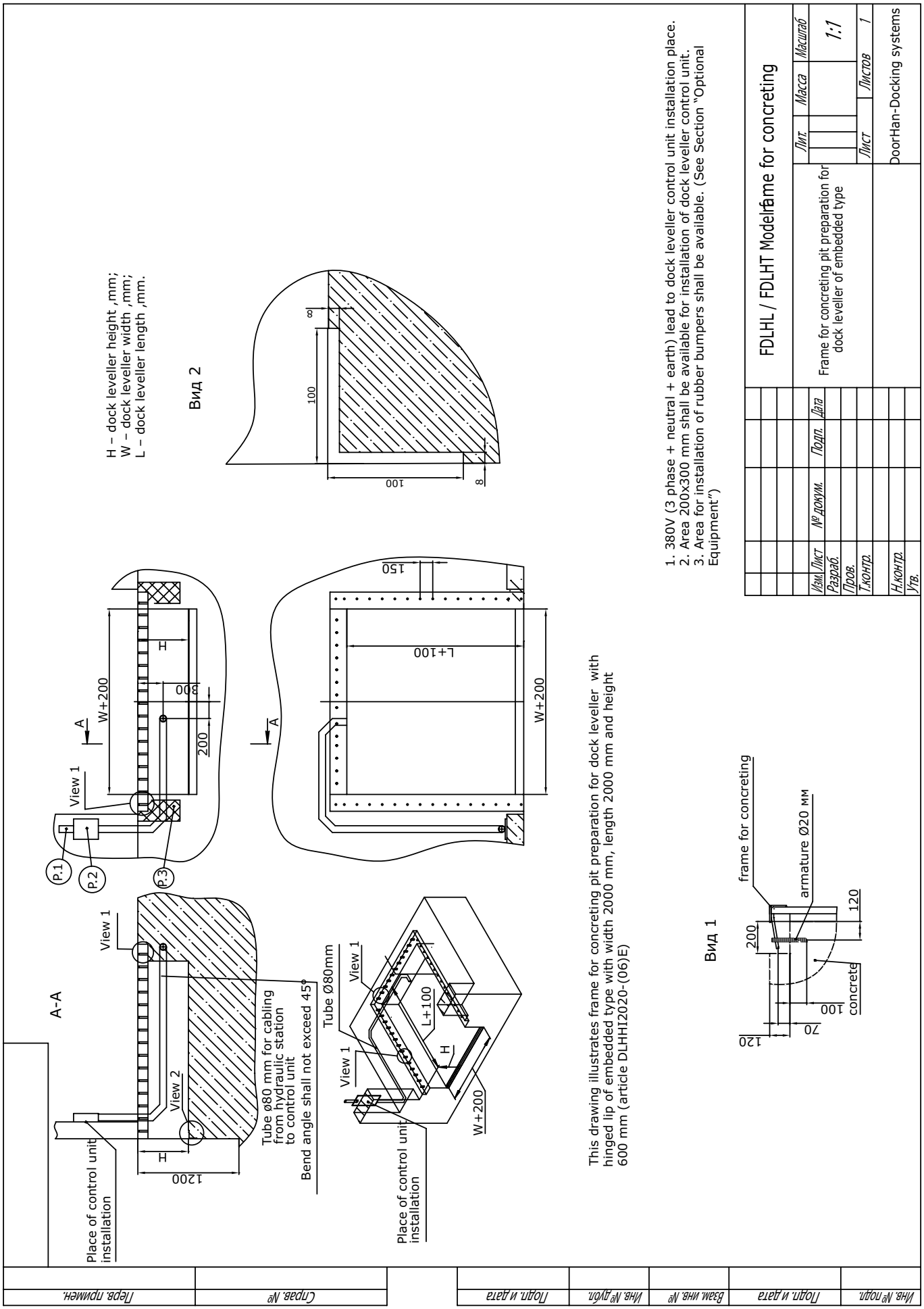
H – dock leveller height ,mm;
W – dock leveller width ,mm;
L – dock leveller length ,mm.
Вид 2
100
8
100
8
150
L+100
W+200
A
A
W+200
H
800
200
View 1
P.1
P.2
P.3
A-A
View 1
View 2
H
1200
Place of control unit installation
Tube ø80 mm for cabling from hydraulic station to control unit
Bend angle shall not exceed 45°
Tube Ø80mm
View 1
View 1
L+100
H
W+200
Place of control unit installation
This drawing illustrates frame for concreting pit preparation for dock leveller with hinged lip of embedded type with width 2000 mm, length 2000 mm and height 600 mm (article DLHHI2020-(06)E)
1. 380V (3 phase + neutral + earth) lead to dock leveller control unit installation place.
2. Area 200x300 mm shall be available for installation of dock leveller control unit.
3. Area for installation of rubber bumpers shall be available. (See Section "Optional Equipment")
Вид 1
frame for concreting
armature Ø20 мм
200
120
concrete
100
70
120
FDLHL / FDLHT Model
Frame for concreting
Frame for concreting pit preparation for dock leveller of embedded type
Лит.
Масса
Масштаб
1:1
Лист
Листов
1
DoorHan-Docking systems
Изм. Лист
№ докум.
Подп.
Дата
Разраб.
Пров.
Т.контр.
Н.контр.
Утв.
Перв. примен.
Справ. №
Подп. и дата
Инв. № дубл.
Взам. инв. №
Подп. и дата
Инв. № подл.

1.The area, required for truck maneuvering and parking in front of the ramp shall have double length of the longest truck plus 2 meters.A truck with length 18 m requires the area 38 m. Free space between the truck and the wall shall be 1.4 m.

2.Distance between bodies of parked trucks shall be enough to open and close the truck's door. Small distance between trucks can cause difficulties for approach and departure of trucks from the ramp. Minimal distance between warehouse door axes shall be 3700 mm. If trucks to be loaded/unloaded, have door, which open along the truck sides, this distance has to be 4000 mm. It is necessary to leave free space 1400 mm between the end truck and the side wall.

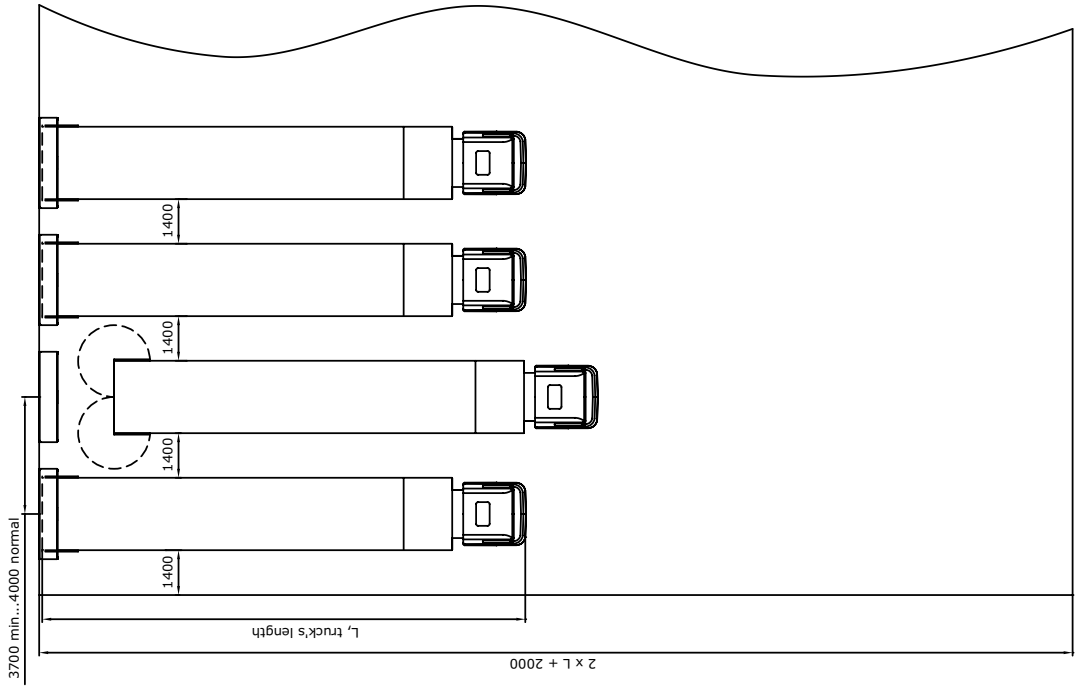

Typical mistakes in design of loading docks

1:1

DoorHan-Docking systems

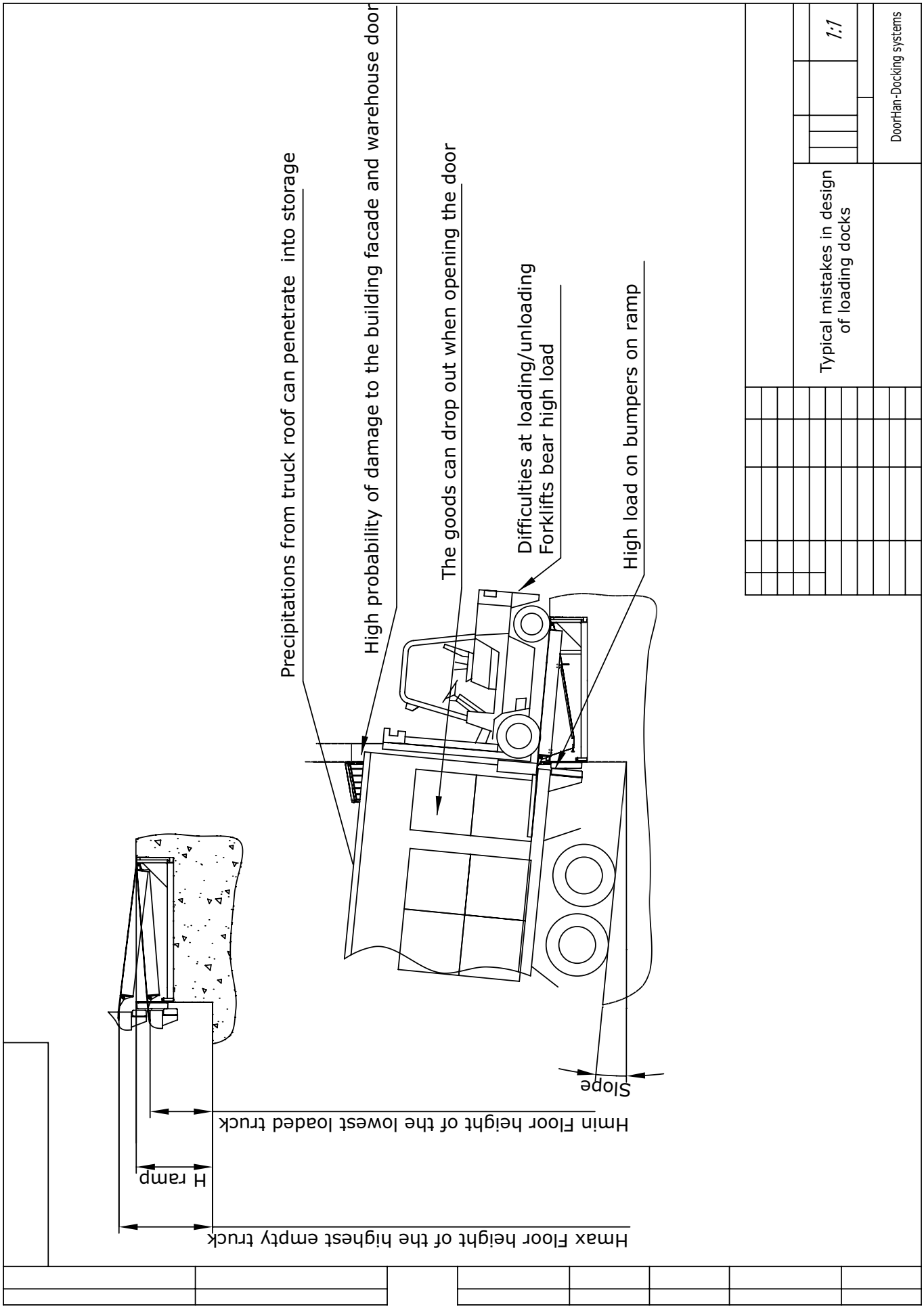
Precipitations from truck roof can penetrate into storage
High probability of damage to the building facade and warehouse door
The goods can drop out when opening the door
Difficulties at loading/unloading
Forklifts bear high load
High load on bumpers on ramp
Slope
Hmin Floor height of the lowest loaded truck
H ramp
Hmax Floor height of the highest empty truck
Typical mistakes in design of loading docks
1:1
DoorHan-Docking systems